Grant
County
Public
Utility
District

ELECTRIC SYSTEM
and
FIBER OPTIC
DESIGN and CONSTRUCTION PROCEDURES
for
SUBDIVISIONS
and
MOBILE HOME PARK
DEVELOPMENTS

REVISED: March - 2021

UNDERGROUND DESIGN & CONSTRUCTION PROCEDURES

TABLE OF CONTENTS

SERVICE CONNECTION AGREEMENT 4
Chapter One – General Information 7
Introduction 7
Owner/Developer Responsibility 7
District Design Acceptance 7
Section Two – Right-of-Way 8
General Information 8
Land Use Requirements 8
Compliance with other Agencies 8
Provide Copies to District 8
Property Corners 8
Easements for Rights-of-Way 8
Public Agency Permits/Licenses for Rights-of-way 8
City Permits 8
Grant County Road Permits 8
Lincoln County Road Permits 8
Columbia Basin Irrigation District Permits 9
Washington State Department of Transportation (WSDOT) Permits 9
Washington Department of Natural Resources (WDNR) Easements 9
Bonneville Power Administration (BPA) Permits 9
United States Bureau of Reclamation (USBR) Licenses or Consent to Use 9
Bureau of Land Management (BLM) Right-of-Way Grant 9
Railroad Licenses 9
Grant PUD Responsibility 9
Customer Responsibility 9

Section Three – Electrical and Fiber Optic System Process 10
Owner/Developer Requirements 10
Owner/Developer Supplied Material 11
Owner/Developer Installation 12
District Supplied Material & Equipment 13
Design Information 14
Electronic Drawing Information 14
Electric System 15
Underground Schematics 16
Street Lighting 17
GCPUD Fiber Optic System 17
Specific by Sheet Design Information for Electrical and Fiber Optic Layouts 18
Deliverables 21
SAMPLE DRAWINGS 22
GCPUD CONSTRUCTION STANDARDS 36
ASSEMBLY UNITS 53
STOCK PAGES 55

SERVICE CONNECTION AGREEMENT

SERVICE CONNECTION AGREEMENT

PUBLIC UTILITY DISTRICT OF GRANT COUNTY
PO Box 1519 Moses Lake WA 98837

(All conditions of service are subject to Grant PUD Customer Service Policies)
SERVICE EXPEDITER: Telephone 509-766-2501 Fax 509-754-6658 email NewService@gcpud.org

1) CUSTOMER MAILING & BILLING INFORMATION:

Name			Date:
Spouse			
Mailing Address			
City		State:	Zip:
Phone	Primary:		Secondary:
Email			
Existing Grant PUD Service	☐ YES ☐ NO	Grant PUD Billing Account Number:	
Contact person/Contractor	Name:		Phone:

2) SERVICE LOCATION: New Service ☐ Existing Service ☐

Residential or Commercial

Address:	
City:	
Plat Addition:	
Lot:	Block:
Parcel Number:	

Irrigation Only

Farm Unit:		Block:
Twp:	Rng:	Sec:
Legal Owner:		
Lot:		Parcel Number:
Mailing Address:		

3) LOAD INFORMATION:

☐ Single Phase 120/240 (recommended residential)		
☐ Three Phase 120/240	☐ Three Phase 120/208	☐ Three Phase 277/480
☐ Underground ☐ Overhead		

Construction Temporary

☐ Non-Metered	☐ Metered	☐ None

Residential:

House size (Sq Ft)		Anticipated KW Usage (including HVAC)	
Shop size (Sq Ft)		Anticipated KW Usage (including HVAC)	
Meter Base Size in Amps	☐ 200 ☐ 400 (320 continuous)		☐ Over 400 (CT Meter)
Building Type	☐ Stick Built ☐ Manufactured Home	Other:	
Future or Additional Load			

Commercial/Non-Residential:

Type of Business or Facility		
Service Size in Amps		General Load HP/KW:
Motors in HP		Other:

Irrigation:

Service Size in Amps		Individual Pump(s) – HP:
Number of Drive motors (HP)		
End Gun Pump (HP)		Other Pumps or Motors:
TOTAL HP LOAD		Future Load:

***Please be sure to sign the agreement on page 2 of 2**

RIGHTS AND OBLIGATIONS

Public Utility District No. 2 of Grant County (Grant PUD) will construct electrical facilities on customer's property, if necessary. In exchange for part of this value received, Customer grants Grant County PUD the right to construct, operate, patrol, maintain and remove overhead and/or underground electrical distribution lines and associated appurtenances. Customer grants Grant County PUD the right to clear the area where the distribution equipment and facilities are located on the customer's property and keep the same clear of brush, trees, timber, structures, improvements and all fire hazards. Customer also grants to Grant County PUD the right of ingress and egress to and from Grant County PUD distribution electrical facilities. Customer agrees not to place, construct or maintain any building, structures or other improvements within a 10-foot area of Grant County PUD electrical facilities. Customer agrees not to reduce or enlarge the required minimum clearances between the existing ground and any overhead or underground power lines. Grant County PUD may seek and enforce specific performance of any activities required of the customer by this section.

SITE SKETCH

Draw a plan of your site including building, septic, drain field, sewer, cable TV, telephone, gas, driveway, other future structures, property lines, proposed power line route and nearest transformer number if available. Also, identify at least two bordering roads and any other foreign easements areas (i.e., irrigation district, public lands, properties belonging to other individuals, etc.)

Site Sketch

North

Transformer number T_____ or G_____

Be sure to include location of customer's meter socket

Official Use:

_____

_____

_____

_____

_____

Legal Landowner of Record Signature

Your signature indicates you have read and agree to the Conditions stated in the "Rights and Obligations" section. Customer understands the work requested & authorizes Grant PUD to begin work as listed on the Service Connection Agreement form. Customer agrees to pay all charges associated with Construction.

_____

Print Name

_____

Signature Date

Unsigned and/or incomplete Service Connection Agreement may delay processing of work order.

Chapter One – General Information

Introduction:

This packet provides information for Owner/Developer's to install overhead and underground facilities within their platted subdivision, master planned resort, planned unit development, binding site plan or any other development and/or segregation of land as approved by the county and/or city planning department. This includes the District's requirements for electrical design, fiber optic design, quality assurance, and construction standards. In addition this packet covers right-of-way requirements, vault and conduit locations and placement, and street light design. It is intended to guide the Owner/Developer and his Design Engineer through the design process. Deviation from these guidelines must be pre-approved in writing by the District's Engineering Technician. As always, the District's Customer Service Policies as written or amended, and all applicable national, state and local codes take precedent over these guidelines.

Owner/Developer Responsibility:

The Owner/Developer is responsible for the entire design, right-of-way and/or right-of-way acquisition, staking, construction, and project management. This includes compliance with all land use requirements within the city and/or county and all code, permit, and right-of-way requirements required by the jurisdictional agencies.

An overlay of all utilities is mandatory to assure proper clearances. All utilities that are installed within the boundaries of the development need to be designed so that adequate clearances as required by the district and all other agencies are maintained. The owner/developer shall coordinate the design and installation with all utilities so that conflicts are minimal or non-existing.

Refer to Section Three for full Owner/Developer Responsibility.

District Design Acceptance:

The District will not accept any design unless it meets the following guidelines & design criteria. If there are deficiencies, the District will give the Owner/Developer a list of deficient items. Construction will not be approved until all deficiencies have been rectified to the satisfaction of the District and approved by the District's Engineering Technician.
The Owner/Developer shall also ascertain that all conflicts with the installation of other utilities (phone, TV, water, sewer, gas, Etc..) have been rectified. The District **WILL NOT** continue installation of their facilities or provide service to future customers until all deficiencies are corrected to the districts satisfaction.

Section Two – Right-of-Way

General Information
This chapter covers Grant PUD's requirements and the Customer's responsibilities for land use requirements, rights-of-way, *permits* and associated fees (Appendix B).

An *Engineering Technician* will be assigned to any "complex project" that requires additional rights-of-way and/or *permits.*

Land Use Requirements
The customer shall comply with the following land use requirements for both the electric system and the fiber optic system.

- **Compliance with other Agencies**
  The Customer will be required to comply with all applicable jurisdictional agencies, state, county, and local statutes. These shall include, but not necessarily be limited to, the County Unified Development Code, Uniform Building Code, Urban Growth Management Area development standards, and regulations requiring certain minimum improvements.

- **Provide Copies to Grant PUD**
  The customer shall provide Grant PUD with executed copies of any and all required agency developmental approvals, i.e. approved building site plan.

- **Property Corners**
  Property corners that are disturbed shall be replaced by a Licensed Surveyor at the owners expense. Property corners shall not be driven deeper than 18 inches below final grade in order to protect buried facilities.

Easements for Rights-of-Way
The customer shall complete the "Service Connection Agreement" with the names of legal land owners, property description(s), and sketches showing all property boundaries that the service connection will affect.

The customer is required to obtain the property owner's signature on the "Service Connection Agreement" in order for Grant PUD to install facilities on the property.

Grant PUD will determine if additional *easements* for rights-of-way are required. Grant PUD will prepare all *easements* on Grant PUD *easement* templates and the Customer shall obtain all property owners' signatures. **Grant PUD's cost for preparing the *easement(s)* for rights-of- way will be a flat fee of $100.00 per *easement*.** The assigned *Engineering Technician* will advise the customer of the required fees.

Once the *easement(s)* for rights-of-way are signed by the property owner(s) and notarized in the presence of a Notary Public, return them to Grant PUD: Attention; Lands Department – Distribution Right-of-Way. Grant PUD will record the *easement(s)* at the respective Auditor's Office of the appropriate county, i.e. Grant, Lincoln, Adams, Douglas, etc.

Public Agency Permits/Licenses for Rights-of-Way
Grant PUD will obtain the required *permits/licenses* from public agencies or entities (WSDOT, BLM, WDNR, Railroads, Cities, etc.).

The customer shall pay for any or all *permits/licenses,* including but not limited to, Washington State Department of Transportation, United States Bureau of Reclamation, United States Bureau of Land Management, Washington State Department of Natural Resources, Railroad, and other *permits/licenses* as may be required along with any required professional surveys.

City *Permits* may be required if Grant PUD's underground *primary* or *secondary conductors* are constructed within city limits. A minimum of two weeks is required to obtain *permit*(s). The City of Quincy and the Town of Warden are the only municipalities that charge a fee. Their fees are based on distance and type of disturbance.

Grant County Road *Permits* are required if Grant PUD's *primary* or *secondary conductors* cross a county road or parallel a county road within their right –of-way. A minimum of two weeks is required to obtain *permit(s).*

Lincoln County Road Permits
Are required if the District's electrical wires, fiber optic cables or conduits cross a county road. The cost varies from $75 to $150, and is subject to change. A minimum of four weeks is required to obtain the permit(s).

Public Agency *Permits/Licenses* for Rights-of-Way (cont'd)

Columbia Basin Irrigation District *Permits* are required if Grant PUD's *primary* or *secondary conductors* cross an irrigation district waterway. These *permits* will be obtained by Grant PUD from the appropriate irrigation district (i.e. South, Quincy, or East Columbia Basin Irrigation District.) A minimum of six weeks is required to obtain *permit(s).* East Columbia Basin Irrigation District charges $100 per crossing application.

Washington State Department of Transportation (WSDOT) *Permits* are required if Grant PUD's *primary* or *secondary conductors* cross a state highway or parallel a state highway within their right-of-way and *easement*. There is a fee for this *permit,* usually ranging in cost from $150 to $500. A minimum of four to six months is required to obtain the *permit(s).*

Washington Department of Natural Resources (WDNR) *Easements* are required if Grant PUD's *primary* or *secondary conductors* cross WDNR property. To obtain this *permit* a professional survey is required. Customer is responsible for acquiring a DNR approved survey WDNR charges $2,500 (subject to change) for the costs of the *permit.* Upon completion of the survey, the survey and application fee will be submitted to DNR for processing and approval. A minimum of twelve months is required to obtain *permit(s).*

WDNR tenants are required to obtain an easement.

Bonneville Power Administration (BPA) *Permits* are required if Grant PUD's p*rimary* or *secondary conductors* cross under a BPA power line or are located in the BPA *easement* area. A minimum of twelve months is required to obtain *permit(s).*

United States Bureau of Reclamation (USBR) *Licenses* or Consent to Use are required if Grant PUD's *primary* or *secondary conductors* cross USBR property. The USBR charges a $100 application fee (subject to change) and a work charge deposit based upon USBR evaluation. The customer will be required to pay the USBR work charge deposit prior to work beginning on the *License* or Consent to Use agreement and any additional costs incurred by the USBR. A minimum of Eighteen months is required to obtain *license(s).*

United States Bureau of Land Management (BLM) Right-of-Way Grant is required if Grant PUD's *primary* or *secondary conductors* cross BLM property. To obtain this *permit,* an application and *permit* fee must be submitted to BLM. The *permit* processing fee ranges from $175 to $1,156. A minimum of twelve months is required to obtain grant(s). Any grant renewal fees will be charged to customer.

Railroad *Licenses* are required if Grant PUD's *primary* or *secondary conductors* cross over, under or parallel to the railroad track.

The application fee for Burlington Northern Santa Fe Railroad is $800, the *license* cost is $3,717, and the cost for the required Railroad protective insurance coverage is $460. The customer will also pay any BNSF required flagging costs.

The application fee for Columbia Basin Railroad is $600, the *license* cost is $3,000 (either fee is subject to change), and a Railroad protective insurance policy will be required and will be acquired by Grant PUD and charged to the customer.

A minimum of four months is required to obtain *permit(s).* Any *license* renewal fees will be charged to the customer.

Grant PUD Responsibility
Determine what easement for rights-of- way are required and prepare legal documents for signatures. Prepare the easement documents for rights-of-way. Receive the signed and notarized easement(s) for rights-of-way from the Customer. Record the signed and notarized easement at the designated County Auditor. Obtain all required permits for rights-of-way to facilitate construction of the Grant PUD electrical and fiber optic equipment. Grant PUD will acquire the permit for right of way from other agencies and pass on the fees associated with the permits.

Customer Responsibility
Obtain appropriate signatures on District prepared easement forms for rights-of-way. All easements and permits for right of way must be, notarized, and received by the Grant PUD prior to any construction. Obtain any permits or easements for rights-of way that may be required for the Customers own equipment, construction, access, etc. Pay for all required licenses, permits, and easement preparation fee.

Section Three – Electrical and Fiber Optic System Process:

Owner/Developer Requirements:

From an approved preliminary plat or other development plan, the Owner/Developer shall be responsible for the design and installation of the underground electrical & fiber optic system. The Owner/Developer shall be responsible for all coordination from beginning to end of the project including but not limited to: utility staking, road crossing placement, material and construction inspection. The following steps will assist the Owner/Developer during the planning, design, and construction stages of the project.

Step 1: Owner(s)/Underlying fee owner shall be required to execute a District Service Connection Agreement and return said document to the District's Service Expediter. serviceexpediter@gcpud.org

Step 2: Owner/Developer shall secure the services of a Design Engineer or Engineering firm licensed in the State of Washington in accordance to WAC and RCW requirements.

Step 3: The Owner/Developer shall schedule a preliminary plan review with the District's Engineering Technician to obtain the required information necessary to design the electric and fiber optic system.

Step 4: The Owner/Developers Design Engineer shall design and layout the complete electrical and fiber optic distribution systems to the District's design specifications. The design shall be shown in relation to all other utilities and be free from conflicts.

Step 5: Submit preliminary design drawings to the District's Engineering Technician for review and approval.

Step 6: Work with the District's right-of-way staff to complete and submit all needed easements and permits as outlined in section two of this document. All easements shall be to the GCPUD only.

Step 7: The Owner/Developer shall obtain from the appropriate city/county agency, directives for street lighting installations. Per the GCPUD customer Service Policy and per IEEE standard street lighting design criteria, if so required.

Step 8: After the district approves the design and design drawings:

a) A professional Engineer shall stamp all drawings per WAC and RCW requirements.
b) Furnish four (4) complete sets of stamped drawings marked "Approved for Construction" in a "B" size (11"x17") format along with one (1) electronic copy of the design in an AutoCAD format. These are to come from the Engineer or Engineering firm that completed the design.
c) Coordinate w/ other utilities (Telephone, Cable TV, & Natural Gas)
d) Furnish a construction schedule to the District's Engineering Technician.
e) Schedule an on-site pre-construction meeting with the District's Engineering Technician, Inspector and the owner/developers construction foreman.
f) Furnish to the district's Engineering Technician and Inspector a complete list of material for owner/developer furnished material along with a list of all vendors.

-The Owner/Developer should contact the Engineer/Engineering firm with any questions specifically about the design.

Step 9: Using the "Approved for Construction" drawings the District's Engineering Technician will prepare a cost estimate for district furnished labor, material, and equipment. A Contribution-in-Aid-of-Construction (CIAC) will be calculated from this estimate. **THE CIAC MUST BE PAID IN FULL PRIOR TO ANY ELECTRICAL CONDUCTOR BEING INSTALLED AND ENGERGIZED.**

Step 10: The District shall inspect and approve all material prior to installation. **MATERIAL USED AND OR PLACED BEFORE INSPECTION SHALL BE SUBJECT TO REPLACEMENT AT THE OWNER/DEVELOPER'S COST.**

Step 11: Proceed with the installation of the electrical and fiber optic vault and conduit system, street light circuits, secondary pedestals, transformer pads, switching vaults, and switchgear vaults.

Step 12: Schedule District inspection(s) prior to covering/backfilling vault and conduit systems. Repair and/or replace any item that does not meet district standards or specifications. **ITEMS NOT INSPECTED, PRIOR TO COVERING/BACKFILLING, SUBJECT TO THE OWNER/DEVELOPER TO ADDITIONAL COSTS FOR INSPECTIONS.**

Step 13: Furnish **"As-Built"** drawings of the Owner/Developer installed vault and duct system. If there are no **"As-Builts"** furnish a set of drawings marked **"No Change".**

Step 14: The District will schedule its work after receiving the CIAC, As-Builts, and after completion of the Owner/Developer portion of the project.
THE DISTRICT WILL NOT SCHEDULE ANY WORK UNTILTHE CIAC HAS BEEN PAID, ALL EASEMENTS, PERMITS AND ANY OTHER AUTHORIZATIONS HAVE BEEN RECEIVED AND THE AS-BUILTS HAVE BEEN RECEIVED.

IF DURING THE GCPUD INSTALLATION PROCESS, THERE ARE DEFECTIVE OR INFERIOR MATERIALS DISCOVERED OR IF THE WORK PRACTICES OF THE CONTRACTOR ARE FOUND TO BE DEFICIENT EVEN AFTER THE INSPECTION PROCESS, THE COST OF REPLACEMENT OR RE-WORK WILL BE AT THE OWNER'S EXPENSE.

Owner/Developer Supplied Material:

All materials shall comply with the District's most recent specifications or be pre-approved by the District's Standards Department.

a) Trenching, Bedding and Backfill

Developer is responsible for all excavation, bedding and backfilling per District specifications, which are included in this document. See District Standard No. 10.0008.

b) Conduit

- Refer to "Conduit Standards for Customer Service Workbooks", which is part of this document.
- Electrical conduit shall be gray Schedule 40 rigid PVC or rigid steel as listed in the attached specifications for design work.
- Acceptable conduit diameters shall be limited to 2, 3, 4, or 6 inches.
- Conduit sweeps shall be 24, 36, or 48 inch radius, as specified or approved by the Engineering Design Technician.
- All Fiber conduit and sweeps will be provided by the District.

c) Transformer Box and Pad

The developer shall supply transformer concrete vaults and pads, per District standards and specifications.

d) Switching Vaults

The developer shall supply all concrete switching vaults, per District Standards and specifications

e) Barriers

Suitable barriers shall be supplied by the Owner/Developer similar to the District's material stock page no. 83271800 or a barrier approved by the District's Engineering Technician.

f) Secondary Mopeds/Pedestals

Pedestals per District standards and specifications shall be supplied by the developer.

g) Material Inspection and Quality Assurance

All materials shall meet the District's QA standards. Vaults, transformer vaults and lids shall be inspected and approved by the District prior to placement. QA of vaults are of particular concern. It should be noted that some suppliers might be temporarily taken off District Standards due to QA concerns. The design Engineer needs to contact the District's Standards Department to see if vendors are still approved.

Owner/Developer Installation:

All material(s) shall be installed to District standards and specifications and within the following parameters:

a) Trenching, Bedding and Backfill

- Developer is responsible for all excavation bedding and backfilling per District specifications, which are included in this document. See District Standard No. 10.0008.
    - If final grade has been changed after Grant PUD inspection and installation and it affects either the electrical or fiber optic system, it will be at the expense of the owner/developer to have the infrastructure raised or lowered.
- Open excavations shall be guarded per WAC requirements.
- Road and street crossings may be either trenched and backfilled, bored or pushed, whichever is acceptable to the governing agency.

b) Conduit

- Conduit shall be installed according to the District's "Conduit Standards for Customer Workbooks" and within the following parameters:
- All conduit shall be installed within the District's Easements and Rights-of-Way.
- Spare electrical conduits installed for future use shall be marked six inches from both ends with Electrical Markers or in some other form approved by the District's Engineering Technician. All ends shall be capped with non-permanent caps.
- Where conduit bends are required, they shall meet the requirements for cable pulling as required in the District's Conduit Specifications.
- Conduit locations entering transformer boxes, hand holes, and vaults shall be coordinated with the District's Engineering Inspector. Conduit shall extend 3 inches inside all vaults and manholes, be perpendicular to the side and have bell ends installed on all conduit ends. Do not glue Bell Ends inside vaults.
- All conduit runs shall have a steel mandrel pulled through them in order to clear out debris and locate damaged conduits. Any damaged conduits shall be repaired by the Owner/Developer. This shall be done prior to the district pulling cable.
- **THE OWNER/DEVELOPER WILL BE SUBJECT TO ADDITIONAL COST IF THE DISTRICT'S CREWS EXPERIENCE DAMAGED OR BLOCKED CONDUITS.**

c) Manholes – Switching & Transformer Boxes

- Manholes and transformer boxes shall be installed within utility easements and adjacent to lot lines, unless otherwise specified by Grant PUD.
- All manholes, transformers, etc. shall be set to the grade established in the approved drawings. Adjustments to grade shall be pre-approved by the District's Engineering Technician or may subject the Owner/Developer to additional cost.
- Manholes and transformer boxes installed on sloping terrain shall be protected from erosion and earth movement.
- Manhole and transformer pads shall be set so that the transformer doors and switch cabinet/manholes are operable from the street side. All equipment shall have and maintain adequate clearances in accordance to the National Electrical Safety Code (NESC) & Washington Administrative Code (WAC) from the front and sides, and back for safe operation.

- If either a transformer or manhole is located where it is susceptible to vehicular contact, District approved barriers shall be installed.

- Prior to equipment placement openings in transformer pads and switching manholes shall be covered for safety at time of installation.

d) Transformer Box and Pads

- All transformer boxes and pads shall be installed to District Standards and Specifications. Refer to District Standard No. 10.1130, "Concrete transformer Box Pad Installation", which is part of this document for further information. All transformers shall be supplied and installed by the District.

e) Switching Vaults

- The owner/developer shall install all switching vaults to the District's Standards and Specifications. All switchgear will be supplied and installed by the District.

f) Secondary Pedestals

- Secondary pedestals shall be installed to the District's Standards and Specifications. Refer to District Standard No. 10.1140 that is part of this document for more information.

- Pedestals shall be installed on easements and adjacent to property corners.

- Pedestals shall be installed 3.5 feet minimum on either side or back of, but not in front of the transformer.

- Pedestals shall have 3.5 feet minimum working clearance from designated "front" side.

- Pedestals shall be placed with the front facing away from the transformer to allow for the secondary conductor from the transformer to be brought into the pedestal in the rear. Refer to 'Pedestal Construction Detail' located on page 8 of the Exhibit Drawings.

- Conduits shall enter the Pedestal from the bottom with conduit elbows. No cutting of Pedestals will be permitted.

- If a Pedestal must be located where it is susceptible to vehicular contact. Protective barriers shall be installed.

g) Roadway Lighting

- The developer shall obtain a written request from the governing agency for street lighting requirements.

- Install 2-inch schedule 40 PVC conduit from the transformer pad vault to each street light hand hole according to the District's Conduit Specifications attached to this document.

- Conduit shall enter the hand hole from the bottom.

- Install hand hole per "Detail Layout 2" and "Detail Layout 3", which are included in this document.

- The developer shall furnish conduit from street light hand hole to steel pole standard, wood pole, or concrete pedestal for steel pole.

h) Individual Services

- For Individual Residence Service, see the "Residential service Workbook". Contact the service expediter for a copy at 509-766-2501 or serviceexpediter@gcpud.org.

District Supplied Material & Equipment

The District will supply primary and secondary conductors, transformers, switch cabinets, and District owned streetlights. The District will install the above material and equipment in the vault and duct system supplied by the Owner/Developer at the Owner/Developer's cost, provided all the criteria is met within these procedures. The District will supply all fiber optic conduits, vaults, and handholes for the Owner/Developer to install at no cost to the Owner/Developer.

Design Information:

Electronic Drawing Information:

Layer management will be used utilizing all of AutoCAD's layer management tools. All entities will be placed on their correct layer

All layers will be placed in a layer filter that will make it easier to distinguish sheet sets within model space. The following is a list of the filters to be used and the layers to be contained within each.

a) Background
- SV-LOTL-EXST-LIN - YELLOW – CONTINUOUS - DEFAULT
- SV-LOTL-FUTR-LIN - YELLOW – CONTINUOUS – 0.20
- SV-LOTN-EXST-TXT - CYAN – PHANTOM – 0.13
- SV-RDRW-EXST-LIN - YELLOW – CONTINUOUS – 0.13
- SV-RDRW-EXST-TXT - YELLOW – CONTINUOUS – 0.13

b) Civil
- All layers that contain the civil infrastructure.

c) Electrical-OH
- ED-CPOH-EXST-LIN - WHITE – CONTINUOUS - DEFAULT
- ED-PPOL-EXST-BLK - WHITE – CONTINUOUS – DEFAULT

d) Electrical-UG
- ED-CPUG-EXST-LIN-1PH – WHITE – DASHED4 – 0.09
- ED-CPUG-EXST-LIN-3PH - WHITE – DASHED6 – 0.09
- ED-CPUG-1PH-FUTR-LIN - WHITE – CONTINUOUS – 0.40
- ED-CPUG-3PH-750-FUTR-LIN - WHITE – CENTER4 – 0.40
- ED-CPUG-3PH-FUTR-LIN - WHITE – DASHED6 – 0.40
- ED-CSSU-FUTR-LIN - 94 – DASHDOT4 – 0.30
- ED-FRAM-FUTR-LIN - WHITE – CONTINUOUS – 0.15
- ED-LBL-CON-PRI - MAGENTA – CONTINUOUS – 0.30
- ED-LBL-CON-SEC - 92 – CONTINUOUS – 0.30
- ED-PADS-FUTR-BLK - WHITE – CONTINUOUS – 0.20
- ED-PED-FUTR-BLK - 94 – CONTINUOUS – 0.20
- ED-STLT-EXST-BLK - MAGENTA – CONTINUOUS - DEFAULT
- ED-VAUL-FUTR-BLK - WHITE – CONTINUOUS - DEFAULT

e) Fiber
- ED-FIBER-FUTR-LIN - WHITE – DASHDOT4 – 0.40
- EF-FVLT-FUTR-BLK - MAGENTA – CONTINUOUS - DEFAULT
- EF-HHOL-FUTR-BLK - MAGENTA – CONTINUOUS - DEFAULT
- EF-TEXT-DIM - MAGENTA – CONTINUOUS - DEFAULT

f) Misc.
- TBLOCK - YELLOW – CONTINUOUS - DEFAULT
- BORDER - 8 – CONTINUOUS - DEFAULT

The previously mentioned layers are to be used for construction design drawings only. The following layers are to be used for the schematic drawings only and are also listed on the sample schematic drawing with there corresponding use.

a) Schematic
- UGTEXT - MAGENTA – CONTINUOUS - DEFAULT
- A - RED – CONTINUOUS - DEFAULT
- B - BLUE – CONTINUOUS - DEFAULT
- C - GREEN – CONTINUOS - DEFAULT
- UGSCHEM - WHITE – CONTINUOUS - DEFAULT
- DDINUMBER - WHITE – CONTINUOUS - DEFAULT
- WOHISTRY - MAGENTA – CONTINUOUS - DEFAULT

- OPEN-TXT - GREEN – CONTINUOUS - DEFAULT
- BORDER - YELLOW – CONTINUOUS - DEFAULT
- TBLOCK - 8 – CONTINUOUS - DEFAULT

Any layers that are used in paper space such as the layers used for text, borders, details and dimensions do not need to be placed in layer filters.

There shall be only one layout in each drawing with all subsequent layouts layered on top. The filters shall be used to control each layout in model and paper space.

There shall be no need to alter or add any layers to the District's layer set. The only layer that shall deviate from the layers mentioned above will be layers that contain the civil infrastructure.

Electric System:

The Owner/Developer shall procure the services of a Design Engineer, registered in the State of Washington, to design the electric system from an approved plat in accordance with the District standards and specifications. The design shall incorporate the following items:

Design Criteria:

Plat Design Drawings:

a) The Plat design drawing shall consist of a map base background, existing electrical facilities, and proposed new electrical facilities, routes and assembly unit framing.

b) Different AutoCAD blocks shall be used to represent existing facilities and new facilities.

c) In all designs separate drawings will be needed for the following:
   - Vicinity Map
   - Electrical Layout
   - Fiber Layout
   - Framing
   - Schedules
   - Underground Schematic
   - Construction Details
   - Combined Layout

d) The framing and schedules can be placed on the same drawing as their associated layout as long as it all fits on a "B" size 11"x17" drawing and is clean and readable.

e) The District will supply a handout and Disk or will deliver via email the following plat standards:
   - Drawing Template
   - Standard Border
   - Standard Blocks
   - Standard Details

f) Remove needless entities from frozen layers and purge all un-necessary blocks, layers, text, text styles etc.. All custom fonts and text styles should be converted to RomanS only and the custom items deleted.

g) Basic layout information will be given to the Design Engineer as to conduit requirements, size and number of underground cables per duct, etc. at the time of preliminary plan review.

h) All electric facilities shall utilize the front lot line design. Front lot line design is along the main street in front of the lot(s). The layout shall include the vault and duct system, switch cabinets, pad-mounted transformers, above ground secondary pedestals, and service locations. PLEASE NOTE: The fiber optic cable system and the electrical system are complete systems unto themselves and shall be designed separately.

i) Conduit design, and installation shall meet the District's Design Standard No. 10.0008, "Trench Construction, PVC Pipe".

j) Elevations shall be shown on design drawings. The Owner/Developer will be responsible for any added expenses if the district needs to adjust, raise, or lower equipment to meet grade or clearances.

k) Non-standard burial depths shall be pre-approved by the District's Engineering Technician and so noted on the design drawings.

Standard underground conductor make-up lengths - Primary Conductor locations:

a) Dip pole:
Primary conductor make up will be the total height of the primary pole.
i.e. 40 foot, class 3 pole, make up length is 40 feet. 45 foot, class 2 pole, make up length is 45 feet.

b) Single phase padmount transformer vault:
Primary conductor make up will be 10 feet into the transformer vault. Conductor make up will be 10 feet out of the transformer vault.
i.e. transformer at loc 1 to transformer at loc 2, with 100 feet between transformer vaults. 10 + 100 + 10 = 120'.

c) Three phase padmount transformer vault, three phase switching vault (4'x6') and three phase switchgear vault (U56G, U56SG, U56V):
Primary conductor make up will be 20 feet into the vault. Conductor make up will be 20 feet out of the vault.
i.e. 45 foot dip pole at loc 1 to switchgear at loc 2, with 100 feet between dip pole and switchgear vault. 45 + 100 + 20 = 165'.

Standard underground conductor make-up lengths - Secondary Conductor loc's:

a) Single Phase padmount transformer:
Secondary conductor make up out of the transformer vault will be 5 feet.

b) Single Phase moped:
Secondary conductor make up into the moped will be 5 feet. Secondary conductor out of the moped will be 5 feet.

c) Single Phase meter base (6 ft. max above ground) & mobile home meter base:
Secondary conductor make up into the meter base 10 feet.

d) Single Phase or Three Phase Secondary riser on Primary or Secondary pole:
Secondary conductor make up on the rise pole will be the height of the pole.
i.e. 40 foot, class 3 pole, make up length is 40 feet. 25 foot, class 4 pole, make up length is 25 feet. Secondary riser on 45 foot primary pole to moped ten feet away is: 45 + 10 + 5 = 60'

e) Single Phase and Three Phase Hand hole (flush mount to ground elevation):
Secondary conductor make up into hand hole will be 5 feet. Secondary conductor make up out hand hole will be 5 feet.

Underground Schematics:

a) An underground schematic is a three-line diagram, showing underground primary electrical facility designs.

b) Underground schematics will include the transition from overhead to underground conductors, vaults, switch gear, transformers, transformer pads, transformer size, fuse size, switch rating, fault indicators, cable type, cable phasing, cable size, cable lengths, and cable tags.

c) All schematics will be drawn on a "B" size (11"x17") border provided there is clarity of detail. Schematics can be drawn on a "D" size (22"x34") border or larger if needed. Consult the District's Engineering Technician for assistance in determining border size.

d) For schematic conductor lengths use the edge to edge distance (i.e. edge of vault to edge of vault) with no conductor make up added. Conductor lengths must match the distances contained within the plan drawing conductor schedule and must match the conduit length contained within the conduit schedule.

e) All schematics must meet the criteria and be laid out as shown in the sample schematic supplied in this package.

f) Schematics will be contained within their own drawing file. The border and schematic shall be drawn in model space only at 1:1 scale.

g) When submitted all schematics must be submitted in **COLOR**, either in electronic or hardcopy form, any schematics submitted in black and white **will not** be accepted.

h) If the design schematic is an addition to an existing schematic, three separate drawings must be submitted.
   a. A before construction schematic (furnished by the district).
   b. A design schematic which contains only the new portion.
   c. An as-built schematic containing the design schematic added to the existing schematic. When adding to an existing schematic the design schematic scale must match the existing schematic scale.

Street Lighting:

General:

For qualified applicants, the District will provide and install a system of non-metered street lighting facilities for dusk to dawn operation. Conventional street lighting consists of transformers and overhead or underground secondary conductors with mast arms and luminaries mounted on wood or metal poles. Additional primary conductor and transformers shall be at the expense of the Owner/Developer in accordance to the District's Line extension Policy, section 4.0 and monthly billing will be in accordance with Rate Schedule 6.

Qualified Applicants:

Qualified Applicants shall be a State, County, City, Public Agency, organization, and Homeowners Association (minimum of 5 Residences), that can contract with the District to provide street lighting.

Design for Qualified Applicants:

The layout and design of the street lights shall meet all criteria and directives set forth by the County/City that has jurisdiction over them. The construction and wiring shall meet all the requirements of applicable federal, state, and local codes. Under certain conditions break-a-way pole bases are required.

Controls for Qualified Applicants

The luminaries for the Multi-Tap, Cutoff optics shall be controlled by individual photo-cells. The Decorative Street Lights can be group controlled using a photoelectric control receptacle shorting block with a photoelectric control relay.

Design for Un-Qualified Applicants

Service to un-qualified Applicants (Applicants not utilizing District Standards) will be considered a line extension and appropriate fees and charges will apply in accordance with Line Extension Policy, Section 4.0. The service will be metered and the Applicant will be responsible for the design, installation, and maintenance of the lighting system

GCPUD Fiber Optic System:

The Owner/Developer "Requirements and Procedures" are identical to the electrical-Owner/Developer requirements, except street lighting requirements. Application for the fiber system shall be made at the same time as application for the electric system.

GCPUD FIBER OPTIC CONDUITS ARE REQUIRED ON ALL PLATS.

Design Criteria:

a) Each vault is capable of accommodating 12 services only. Any more then 12 services will require an additional vault.

b) The fiber optic system shall incorporate street side arrangement with vaults set to grade for splicing and terminations.

c) The District allows joint trench with fiber optic cable, see trenching and conduit details in the attached sample drawing.

d) The District will supply all Orange PVC Conduit, Grey Conduit sweeps, Vaults, Handholes and other pertinent materials to Owner/Developer. Owner/developer shall install all material as designed.

e) The District will furnish and install fiber optic cable and splices in accordance to the District's fiber optic Customer Service Policies and build out schedule or as amended.

f) All fiber optic facilities shall be installed within easements and rights-of-way. Refer to page 9 of the Exhibit Drawings.

g) Fiber optic vaults and handholes shall be installed per Detail Layout 3 found in the section titled "Sample Drawings" in the Exhibit Drawings packet. They shall be on either side of but not in the front or back of the transformer pad, or vault.

h) If fiber optic vaults or handholes must be located where susceptible to vehicular contact protective barriers shall be installed.

i) Conduits shall enter the bottom of the fiber optic vault or handhole. No cutting of the vault or handhole is permitted.

Specific by Sheet Design Information for Electrical and Fiber Optic Layouts:

I) The cover sheet will contain the following:

a) A list of assembly units and descriptions used in the design.

b) The development name

c) The Section, Township and Range that the development will be in.

d) A vicinity map as described on the example cover sheet

e) All typical road cross sections. If there is more than one cross section in the project they all must be included. If there is not enough room on the cover sheet, include them in the detail sheets with the most common or typical cross section included on the cover sheet as shown in the example.

f) A sheet index

g) The "Call before you dig" (811 or 1-800-424-5555) shall be up to date and on the cover sheet.

II) The Electrical Layout will contain the following:

a) North Arrow

b) Legend

c) Roads and Road Names

d) Road Right of Way & Utility Easements

e) Lot lines, with Lot and Block Numbers.

f) All existing adjacent Overhead and Underground electrical facilities.

g) All proposed new primary and secondary electrical facilities

h) All locations will be numbered sequentially starting at location 1, all new facilities and sweeps will be numbered. Only primary locations will have sequential numbers, all secondary locations will be alpha-numeric, the numeric number will match the number on the primary structure and will be sequential alpha characters after. See the attached drawing package for examples.

i) Street Lighting plan according to the specifications set forth by the appropriate County/City agency & in accordance with IEEE standards.

j) The "Call before you dig" (811 or 1-800-424-5555) shall be up to date and contained on each sheet.

III) The Fiber Layout will contain the following:

a) North Arrow

b) Legend

c) Roads and Road Names

d) Road Right of Way & Utility Easements

e) Lot lines, with Lot and Block Numbers.

f) All existing adjacent Overhead and Underground fiber facilities.

g) All proposed new fiber facilities.

h) All locations will be numbered sequentially starting at a number rounded up to the nearest hundredth from the last electrical location. For instance if the last electrical location is 75 the first location for the fiber layout will be location 100, all new facilities and sweeps will be numbered. Only primary locations will have sequential numbers, all secondary locations will be alpha-numeric, the numeric number will match the number on the primary structure and will be sequential alpha characters after. See the attached drawing package for examples.

i) The "Call before you dig" (811 or 1-800-424-5555) shall be up to date and contained on each sheet.

IV.) The Framing Layout will contain the following:

a) Shall contain all framing for the electrical, street light, and fiber optic layouts.

b) The electrical framing shall be first, followed by the street light framing and lastly the fiber optic framing. If possible contain all framing within one sheet but if needed more sheets can be used.

c) All secondary locations must be below the primary locations they are associated with.

d) All overhead dip locations will be framed by the District's Engineering Technician. If the design is all overhead the Technician will assist and guide the Design Engineer in the correct framing.

e) The framing shall designate the difference between owner/developer supplied and installed - district supplied, owner/developer installed and district supplied and installed.

f) The "Call before you dig" (811 or 1-800-424-5555) shall be up to date and contained on each detail sheet.

V.) The Schedules Layout will contain the following:

a) The electrical schedules shall be laid out as follows:
- 6" Conduit, 3 Phase Primary (3-1100AL), 6" Sweeps
- 4" Conduit, 3 Phase Primary (3-1/0AL-EPR), 4" Sweeps
- 2" Conduit, 1 Phase Primary (1/0AL-EPR), 2" Sweeps
- 3" Conduit, 1 Phase Secondary (350AL TX), 3" Sweeps
- 2" Street Light Conduit, 1 Phase Secondary (2-#6AL), 2" Sweeps (or larger if needed)
- 3 phase secondary as needed

b) The Fiber Optic schedules shall be laid out as follows:

- 2" Conduit (Orange) w/ #12 THHN Wire, 2" Sweeps – (express)
- 2" Conduit (Orange) w/ #12 THHN Wire, 2" Sweeps – (distribution)

c) There is no need to designate Fiber Optic Cable unless directed otherwise by the District's Engineering Technician.

d) The schedules shall designate the difference between Owner/Developer supplied and installed, District supplied - Owner/Developer installed, and District supplied and installed.

e) All schedules shall show the conductor make up as follows:

- 20'+120'+20', this represents 20' out of the vault of transformer pad + the conduit length as shown on the drawings and in the conduit schedule + into the transformer vault or pad.

f) For all make up lengths please reference the Standard Underground Conductor Make-Up Lengths, shown in the Electric System Design criteria above.

VI.) The Underground Schematic Layout will contain the following

a) North Arrow

b) Road Names

c) Dimensions from device to section corners or road intersections where applicable.

d) All new cable tags, pad tags, vault tags and device's to be fused (as in the case of switchgear or DIP poles) shall be underlined to differentiate the new from the old. Especially important on combined schematics where the new meets the old.

e) All existing underground electrical facilities where applicable.

f) All proposed new primary underground facilities.

g) Each cable run will include the cable size and length

VII.) The Details Layout will contain the following:

a) A north arrow on each detail where applicable.

b) The following details shall be contained within each drawing package:

- Typical trench construction (Can be modified to match design)
- Typical Common Trench Detail
- U46V / Pedestal – Section Detail
- Typical Fiber Hand Hole/Transformer Moped/Street Light/Switch Vault Placement
- Typical Fiber Vault/Transformer Moped/Street Light/Switch Vault Placement
- Secondary Pedestal Detail
- Typical groupings of all utility structures such as @ lot lines that contain electric, fiber, telephone, TV, & gas structures.

c) The following details are optional but must be contained within the drawing package if the facilities are contained within the design.

- Street Light Pole & Hand Hole Placement

- Concrete Encased Conduit Construction
- Sonet Tube Detail

d) Typical Details can be altered to match the design.

e) The notes contained within the sample drawing shall be on each detail page.

f) The Conduit specifications contained within the sample drawing shall be on each detail page.

g) The "Call before you dig" (811 or 1-800-424-5555) shall be up to date and contained on each detail sheet.

VIII.) The All Combined Layout will contain the following:

a) North Arrow

b) Legend

c) Roads and Road Names

d) Road Right of Way & Utility Easements

e) Lot lines, with Lot and Block Numbers.

f) All existing adjacent Overhead and Underground electrical and fiber optic facilities.

g) All proposed new primary and secondary electrical facilities and all new fiber optic facilities.

h) All new and existing adjacent infrastructure and utilities, including but not limited to, water pipe runs and water meters, sewer pipe runs and sewer services, storm drains and catch basins, Gas, Phone, TV and Cable.

i) All civil infrastructure will be contained within one AutoCAD block.

Deliverables:

The Owner/Developer shall deliver to the district the following deliverables as required through-out the design and construction process:

Land Use Documents:

The Owner/Developer shall provide executed copies of any and all required agency developmental approvals to the District's Engineering Technician, i.e. approved preliminary plat, approved building site plan, etc., prior to the placement of any electrical facilities.

Preliminary Drawings:

Submit two (2) sets of preliminary hard copy drawings for mark-up and approval prior to the pre-construction meeting and approval of the construction drawings. At the District's Engineering Technician's discretion electronic CAD files via email may be acceptable.

"Approved for Construction" Drawings:

Furnish four (4) sets of District approved drawings marked "Approved for Construction" and one electronic copy in an AutoCAD format to the District's Engineering Technician within two(2) weeks of final approval. The drawings shall contain Professional Engineer signed and stamped per RCW and WAC requirements.

As-Built Drawings:

Upon completion of construction the Owner/Developer shall furnish the district a signed and stamped set of drawings marked "As-Built" with the date of construction completion and an electronic copy in an AutoCAD format for District use.

SAMPLE DRAWINGS

GCPUD AMFM LAYERS/BLOCKS

ITEM	NAME	LAYER NAME	LINE TYPE	PEN	SCREEN	BLOCK NAME	ATTRIBUTES
———	15kV OVERHEAD	ED–CPOH–EXST–LIN	CONTINUOUS	7	WHITE	NONE	NONE
— — — —	15kV UNDERGROUND	ED–CPUG–EXST–LIN	DASHED2	7	WHITE	NONE	NONE
———	600V OVERHEAD	ED–CSSO–EXST–LIN	CONTINUOUS	3	GREEN	NONE	NONE
— — — — — — —	600V UNDERGROUND	ED–CSSU–EXST–LIN	UG_SEC	3	GREEN	NONE	NONE
———	STREETLIGHT – OVERHEAD	ED–CSLO–EXST–LIN	CONTINUOUS	3	GREEN	NONE	NONE
———	115/230kV OVERHEAD	ET–CPUD–EXST–LIN	CENTER	1	RED	NONE	NONE
——— — — ———	CANAL RIGHT OF WAY	SF–CANL–EXST–LIN	CANAL	180		NONE	NONE
———	SHORELINE	SF–SHOR–EXST–LIN	CONTINUOUS	7	WHITE	NONE	NONE
——— — — ———	DRAINAGE RIGHT OF WAY	SV–DRRW–EXST–LIN	CANAL	180		NONE	NONE
———	FENCE	SF–FENC–EXST–LIN	CONTINUOUS	7	WHITE	NONE	NONE
———	COUNTY LINE	SV–CNTY–EXST–LIN	CONTINUOUS	7	WHITE	NONE	NONE
———	RAILROAD	SF–RLRD–EXST–LIN	PHANTOM	4	CYAN	NONE	NONE
——— — — ———	EASEMENT	SV–ESMT–EXST–LIN	CANAL	180		NONE	NONE
———	FARM UNIT	SV–FARM–EXST–LIN	CONTINUOUS	2	YELLOW	NONE	NONE
———	LOT LINE	SV–LOTL–EXST–LIN	CONTINUOUS	2	YELLOW	NONE	NONE
———	MEANDER LINE	SV–MEAN–EXST–LIN	CONTINUOUS	7	WHITE	NONE	NONE
———	PROJECT LANDS	SV–PROJ–EXST–LIN	PHANTOM	7	WHITE	NONE	NONE
———	ROAD RIGHT OF WAY	SV–RDRW–EXST–LIN	PHANTOM	4	CYAN	NONE	NONE
———	SECTION LINE	SV–SECT–EXST–LIN	CONTINUOUS	2	YELLOW	NONE	NONE
F / 8T E122	DEVICES	ED–DEVS–EXST–BLK	CONTINUOUS	6	MAGENTA	DEVICE	TYPE, DEVICE, RATING
○ 40P3	POLE	ED–PPOL–EXST–BLK	CONTINUOUS	7	WHITE	DWPOLE	OWNER, CABLETV, PHONE, OTHER, MATERIAL, TREAMENT YEAR, HEIGHT, CLASS, INSTALL YEAR, WO
● 40P3	NEW POLE	ED–PPOL–PREL–BLK	CONTINUOUS	7	WHITE	DWPOLE	OWNER, CABLETV, PHONE, OTHER, MATERIAL, TREAMENT YEAR, HEIGHT, CLASS, INSTALL YEAR, WO
□ P1234	TRANSFORMER BOX	ED–PADS–EXST–BLK	CONTINUOUS	7	WHITE	EXST_XMR	NONE
▨ ———	NEW TRANFORMER BOX	ED–PADS–FUTR–BLK	CONTINUOUS	7	WHITE	NEW_XMR	NONE
S V0234	SWITCHGEAR	ED–VAUL–EXST–BLK	CONTINUOUS	7	WHITE	EXST_SWGRVT	NONE
S ———	NEW SWITCHGEAR	ED–VAUL–FUTR–BLK	CONTINUOUS	7	WHITE	NEW_SWRVT	NONE
V V0235	VAULT	ED–VAUL–EXST–BLK	CONTINUOUS	7	WHITE	EXST_SWVT	NONE
V ———	NEW VAULT	ED–VAUL–FUTR–BLK	CONTINUOUS	7	WHITE	NEW_SWVT	NONE

K:\PRE\STDS\WORKBKS\PLAT_HANDOUT\AMFM1.DWG

GCPUD AMFM LAYERS/BLOCKS

ITEM	NAME	LAYER NAME	LINE TYPE	PEN	SCREEN	BLOCK NAME	ATTRIBUTES
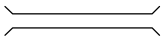	PVC CONDUIT	ED-DUCT-EXST-LIN	CONTINUOUS	2	YELLOW	DDUCTP	NONE
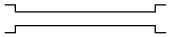	METAL CONDUIT	ED-DUCT-EXST-LIN	CONTINUOUS	2	YELLOW	DDUCTP	NONE
	DOWN GUY	ED-GUYS-EXST-BLK	CONTINUOUS	6	MAGENTA	DGUY	NONE
	SIDEWALK GUY	ED-GUYS-EXST-BLK	CONTINUOUS	6	MAGENTA	DSGUY	NONE
	SPAN GUY	ED-GUYS-EXST-BLK	CONTINUOUS	6	MAGENTA	DSPAN	NONE
	DOUBLE SPAN GUY	ED-GUYS-EXST-BLK	CONTINUOUS	6	MAGENTA	DBGUY	NONE
	POLEMOUNT TRANSFORMER	ED-XMRS-EXST-BLK	CONTINUOUS	6	MAGENTA	XPOLMT	STENCIL, PHASE, BANK, POINT #, WO, TAP
	PADMOUNT TRANSFORMER	ED-XMRS-EXST-BLK	CONTINUOUS	6	MAGENTA	XPADMT	STENCIL, PHASE, BANK, POINT #, WO, TAP
	TRANSCLOSURES *NOTE: NO LONGER USED FOR NEW DESIGN.	ED-XTRN-EXST-BLK	CONTINUOUS	6	MAGENTA	XTRNSCL	PHASE, STENCIL#, VOLTAGE, KVA
	DEVICE	ED-DEVS-EXST-BLK	CONTINUOUS	6	MAGENTA	DEVICE	TYPE, DEVICE, RATING A AIR SWITCH C CAPACITOR D DISCONNECT F FUSED CUTOUT O OIL SWITCH P POTHEAD PC PHOTO CONTROL RM RELAY, MULTIPLE RS RELAY, SERIES SC SWITCHED CAPACITOR SS SUN SWITCH X RECLOSER
	REGULATOR	ED-DEVS-EXST-BLK	CONTINUOUS	6	MAGENTA	DVREG	DEVICE TYPE, DDI #, RATING, STENCIL, PHASE
	HANDHOLE	ED-HHOL-EXST-BLK	CONTINUOUS	3	GREEN	DVHNDHO	NONE
	PEDESTAL	ED-PED-FUTR-BLK	CONTINUOUS	94		PED	NONE
	STREET LIGHT	ED-STLT-EXST-BLK	CONTINUOUS	6	MAGENTA	DSTLITE	AREA, NUMBER
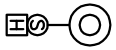	STREET LIGHT & HANDHOLE	ED-STLT-EXST-BLK	CONTINUOUS	6	MAGENTA	NEW_SLHH	NONE
	TRANSMISSION POLE	ET-POLE-EXST-BLK	CONTINUOUS	1	RED	TPOLE	# POLES, OWNER, CABLETV, PHONE, MATERIAL TREATMENT YEAR, HEIGHT, INSTALL YEAR, WO, ID#
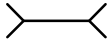	TRANSMISSION TOWER	ET-POLE-EXST-BLK	CONTINUOUS	1	RED	TTOWER	ED, CLASS, HEIGHT, TYPE, LINE NAME, DISTANCE TO, BEARING TO

K:\PRE\STDS\WORKBKS\PLAT_HANDOUT\AMFM2.DWG

GCPUD AMFM LAYERS/BLOCKS

ITEM	NAME	LAYER NAME	LINE TYPE	PEN	SCREEN	BLOCK NAME	ATTRIBUTES
	ELECTRONIC MARKER	ED-MARK-EXST-BLK	CONTINUOUS	7	WHITE	MARKER	NONE
	FIBER OVERHEAD	EF-CFOH-EXST-LIN	CONTINUOUS	30		NONE	NONE
	FIBER UNDERGROUND	EF-CFUG-EXST-LIN	CONTINUOUS	30		NONE	NONE
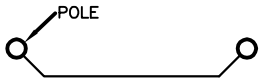	FIBER OH CONDUIT	EF-CFOC-EXST-LIN	CONTINUOUS	30		NONE	NONE
	FIBER HUB	EF-FHUB-EXST-BLK	CONTINUOUS	30		FHUB	VAULTID
	FIBER HAND HOLE	EF-HHOL-EXST-BLK	CONTINUOUS	30		EXST_FHH	NONE
	NEW FIBER HAND HOLE	EF-HHOL-FUTR-BLK	CONTINUOUS	6	MAGENTA	NEW_FHH	NONE
	FIBER VAULT	EF-FVLT-EXST-BLK	CONTINUOUS	30		EXST_FVT	NONE
	NEW FIBER VAULT	EF-FVLT-FUTR-BLK	CONTINUOUS	6	MAGENTA	NEW_FVT	NONE
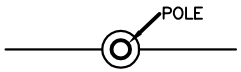	FIBER LOOP	EF-LOOP-EXST-BLK	CONTINUOUS	30		FLOOP	ID
	FIBER SPLICE	EF-SPLC-EXST-BLK	CONTINUOUS	30		FSPLICE	ID
	SONETGEAR	EF-_____-EXST-BLK	CONTINUOUS	30		F_____	ID

K:\PRE\STDS\WORKBKS\PLAT_HANDOUT\AMFM3.DWG

COMMON PUD PARTS & ASSEMBLYS

ITEM#	DESCRIPTION
FIBER	
J085	CONDUIT, SCH 40, FIBER OPTIC (ORANGE), 2"
J088	TRACER WIRE, #12 THHN ORG
J230	FIBER VAULT
JT02	CONDUIT, STEEL ELBOW GALV 2" 90 DEG
JT32	CONDUIT, SCH 40 ELBOW 2" 90 DEG
JU78	FIBER HANDHOLE
STREET LIGHTS	
L20	LIGHT 200W HPS 120V W/PC
LA12	12FT STEEL MAST ARM, STREET LIGHT
LDB30	LIGHT DIRECT BURIED, STEEL STANDARD, 30'
LDB40	LIGHT DIRECT BURIED, STEEL STANDARD, 40'
LF1	LIGHT FUSE, BREAK-AWAY SINGLE
LV	ENCLOSURE, LIGHTING JUNCTION BOX
LW	WIRE, CONDUIT, & ACCESORIES FOR LDB30-40, LPED30-40
UNDERGROUND FACILITIES	
U46V	VAULT, TRANSFORMER, 1 PHASE, 15-167KVA, 4'8" SQ. X 3'6"
U47V	VAULT, TRANSFORMER, 3 PHASE, 45-500KVA, 4'8" SQ. X 3'6"
U54V	VAULT, CONCRETE, SWITCHING, 1 PHASE, 4'8" SQ. X 5'6"
U55V	VAULT, CONCRETE, SWITCHING, 3 PHASE, 6' X 4' X 3'6"
U56SG	VAULT, CONCRETE, SWITCHGEAR, 9' X 5' X7'2"
U56V	VAULT, CONCRETE, SWITCHING, 3 PHASE, 9' X 5' X7'2"
U59	JUNCTION BUS, 4 POS
U69	CAP, PROTECTIVE GROUNDED
U79	PEDESTAL, SECONDARY - ABOVE GROUND
U84TEP	CONNECTOR, ELBOW, 1/0 AL EPR, 15KV LOADBREAK W/TEST POINT
UFIV03	FAULT INDICATOR UG TPR 300A 1P
UA9	CONCRETE GAURD POST
CONDUIT, ELBOWS & BELL ENDS	
T22	CONDUIT, SCH 40 PVC, 2"
T23	CONDUIT, SCH 40 PVC, 3"
T14	CONDUIT, SCH 40 PVC, 4"
T16	CONDUIT, SCH 40 PVC, 6"
T32	CONDUIT, SCH 40 PVC ELBOW DB 2" X 36"R, 90 DEG
T32A	CONDUIT, SCH 40 PVC ELBOW DB 2" X 24"R, 90 DEG
T33	CONDUIT, SCH 40 PVC ELBOW DB 3" X 36"R, 90 DEG
T33A	CONDUIT, SCH 40 PVC ELBOW DB 3" X 24"R, 90 DEG
T34	CONDUIT, SCH 40 PVC ELBOW DB 4" X 36"R, 90 DEG
T42	CONDUIT, SCH 40 PVC ELBOW DB 4" X 36"R, 45 DEG
T52	CONDUIT, STEEL ELBOW GALV 2" X 36"R, 45 DEG
T53	CONDUIT, STEEL ELBOW GALV 3" X 36"R, 45 DEG
T54	CONDUIT, STEEL ELBOW GALV 4" X 36"R, 45 DEG
T56	CONDUIT, STEEL ELBOW GALV 6" X 36"R, 45 DEG
T62	CONDUIT, STEEL ELBOW GALV 2" X 36"R, 90 DEG
T63	CONDUIT, STEEL ELBOW GALV 3" X 36"R, 90 DEG
T64	CONDUIT, STEEL ELBOW GALV 4" X 36"R, 90 DEG
T66	CONDUIT, STEEL ELBOW GALV 6" X 36"R, 90 DEG
T92	CONDUIT, FIBERGLASS ELBOW 2" X 36"R, 90 DEG
T93	CONDUIT, FIBERGLASS ELBOW 3" X 36"R, 90 DEG
T94	CONDUIT, FIBERGLASS ELBOW 4" X 36"R, 90 DEG
T96	CONDUIT, FIBERGLASS ELBOW 6" X 36"R, 90 DEG
T80	SEALANT, INSTAFOAM, 1 CU. FT. KIT
T82	BELL END, 2" PVC
T83	BELL END, 3" PVC
T84	BELL END, 4" PVC
T86	BELL END, 6" PVC
CONDUCTORS	
A10C	600V UG SNGL #6 AL
A36C	600V UG TRIPLEX AL, 2 - 350 & 1-4/0
A01C1E	1/0 AL EPR 15KV, 1 PHASE
A01C3E	1/0 AL EPR 15KV, 3 PHASE
A08C3E	1100 AL EPR 15KV, 3PHASE

SEE GRANT PUD PARTS CATALOG FOR ITEMS NOT LISTED ABOVE.

DEVELOPMENT NAME

T.00N R.00E S.00

INCLUDE A VICINITY MAP OF THE AREA AROUND THE PLAT IN A 1/2 MILE RADIUS. INCLUDE THE CITY OR OUTLYING AREA NAME, ALL MAJOR STREET NAMES AND ANY ARTERIAL STREETS ADJACAENT TO THE PLAT, A NORTH ARROW, ANY SURRONDING PLAT NAMES. VICINITY MAP MAY NEED TO BE ENLARGED DEPENDING ON THE AREA THE PLAT IS LOCATED. THIS DECISION IS AT THE DISCRETION OF THE DESIGNER.

SHEET INDEX

SHEET 1 .... COVER SHEET
SHEET 2 .... PRIMARY CONDUIT LAYOUT
SHEET 3 .... FIBER CONDUIT LAYOUT
SHEET 4 .... FRAMING
SHEET 5 .... SCHEDULES
SHEET 6 .... SCHEMATIC
SHEET 7 .... DETAIL SHT. 1
SHEET 8 .... DETAIL SHT. 2
SHEET 9 .... DETAIL SHT. 3
SHEET 10 .... ALL FACILITIES COMBINED

VICINITY MAP
NOT TO SCALE

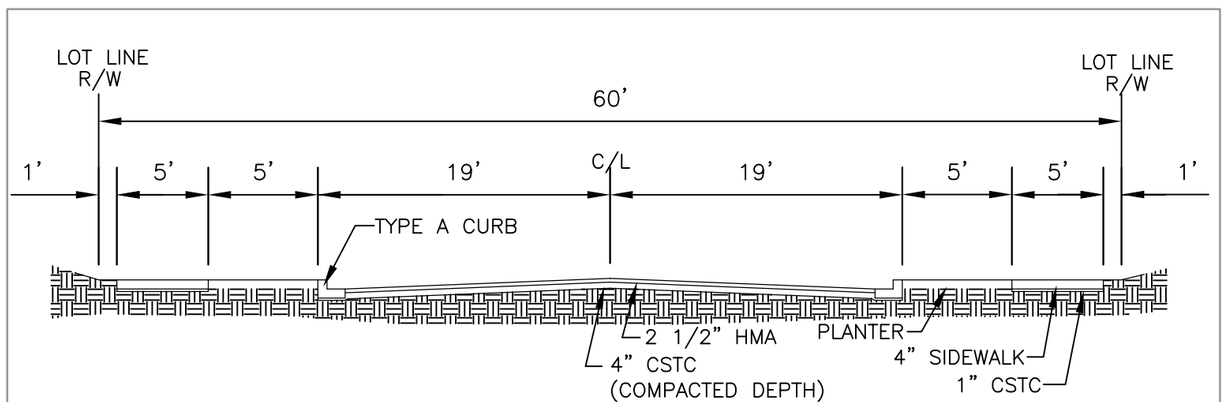

TYPICAL CROSS SECTION

CALL BEFORE YOU DIG 48 HOURS IN ADVANCE
DIAL 811 OR (1-800-424-5555)

Grant County PUBLIC UTILITY DISTRICT
Excellence in Service and Leadership
P.O. Box 878
EPHRATA, WASHINGTON 98823
(509)754-5088
www.gcpud.org

REV.	DESCRIPTION	DSN	CHK	ORG	APP1	APP2	DATE
3							
2							
1							
A0	PRELIMINARY New Drawing						

YELLOW BOOK
EXHIBIT DRAWING
VICINITY MAP

TITLE

PRELIMINARY

CATEGORY

DGS FILE: EXHIBIT-DWG
DESIGNER: MAB
ORIGINATOR: TCY
CHECKER: TCY
DATE: 04/07/09
DRAWING NUMBER: EXHIBIT-DWG
LAST FILE: 06/25/09
SHT. 1 of 10
PLOT SCALE
PLOT BY:
DWG SIZE: B
PLOT DATE:

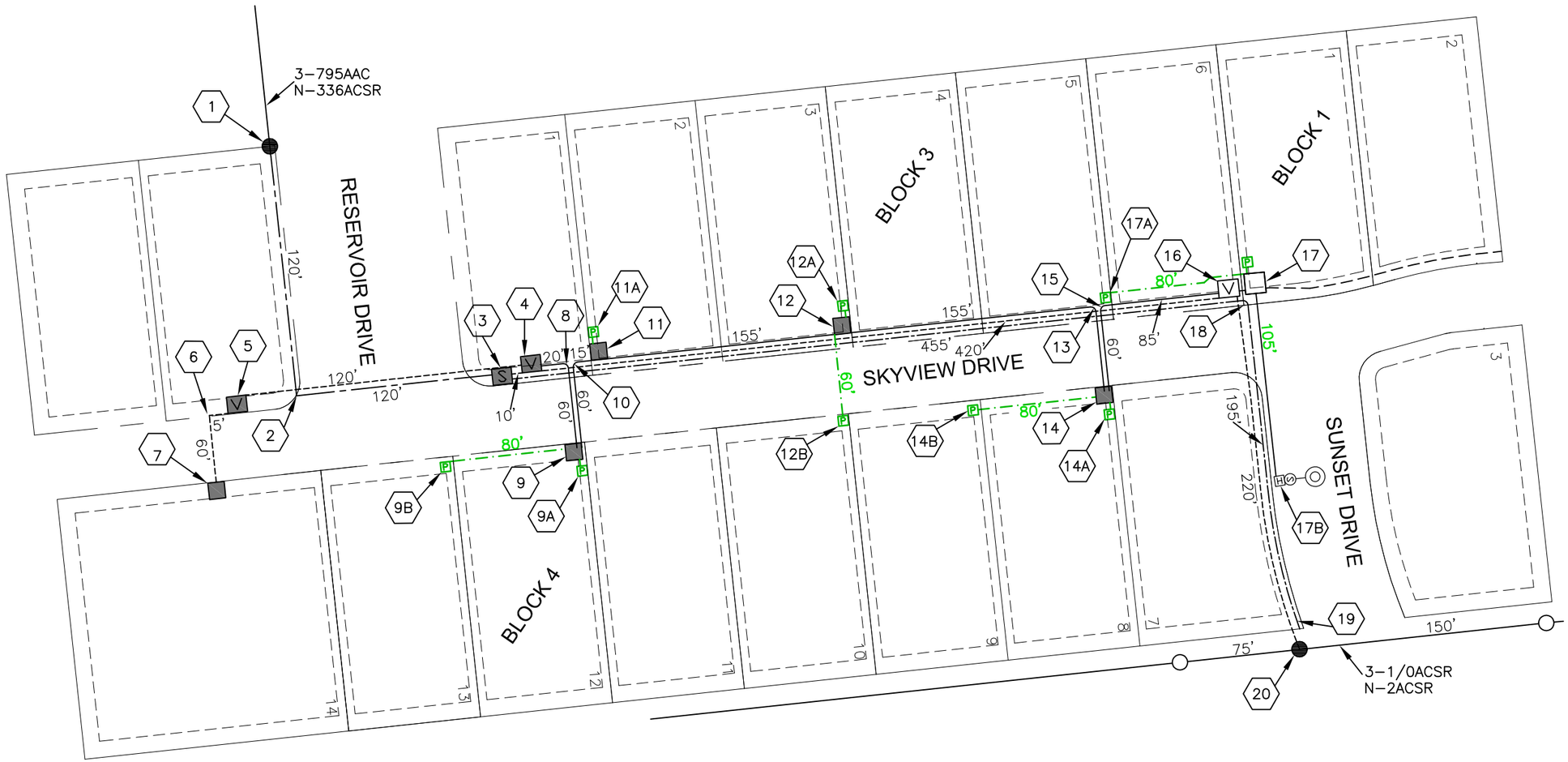

LEGEND

- EXISTING POLE
- NEW POLE
- NEW SWITCH VAULT
- EXISTING SWITCH VAULT
- NEW SWITCHGEAR VAULT
- EXISTING SWITCHGEAR VAULT
- NEW TRANSFORMER
- EXISTING TRANSFORMER
- PEDESTAL
- NEW STREET LIGHT & HAND HOLE
- RIGHT OF WAY
- PROPERTY LINE
- PUBLIC UTILITY EASEMENT
- 2" SCH40 PVC CONDUIT
- 3" SCH40 PVC CONDUIT
- 4" SCH40 PVC CONDUIT
- 6" SCH40 PVC CONDUIT
- EXST. 1-PHASE POWER (IN CONDUIT)
- EXST. 3-PHASE POWER (IN CONDUIT)

CALL BEFORE YOU DIG 48 HOURS IN ADVANCE
DIAL 811 OR (1-800-424-5555)

Grant County PUBLIC UTILITY DISTRICT
Excellence in Service and Leadership
P.O. Box 878
EPHRATA, WASHINGTON 98823
(509)754-5088
www.gcpud.org

REV.	DESCRIPTION	DSN	CHK	ORG	APP1	APP2	DATE
3							
2							
1							
A0	PRELIMINARY New Drawing						

TITLE
YELLOW BOOK
EXHIBIT DRAWING
ELECTRICAL LAYOUT

PRELIMINARY
SUB-CATEGORY

CATEGORY	
DGS FILE	EXHIBIT-DWG
DESIGNER	MAB
ORIGINATOR	TCY
CHECKER	TCY
DATE	04/07/09
LAST FILE	06/25/09
SHT.	2
OF	10
PLOT SCALE	
PLOT BY:	
PLOT DATE:	
DWG SIZE	B

DRAWING NUMBER
EXHIBIT-DWG

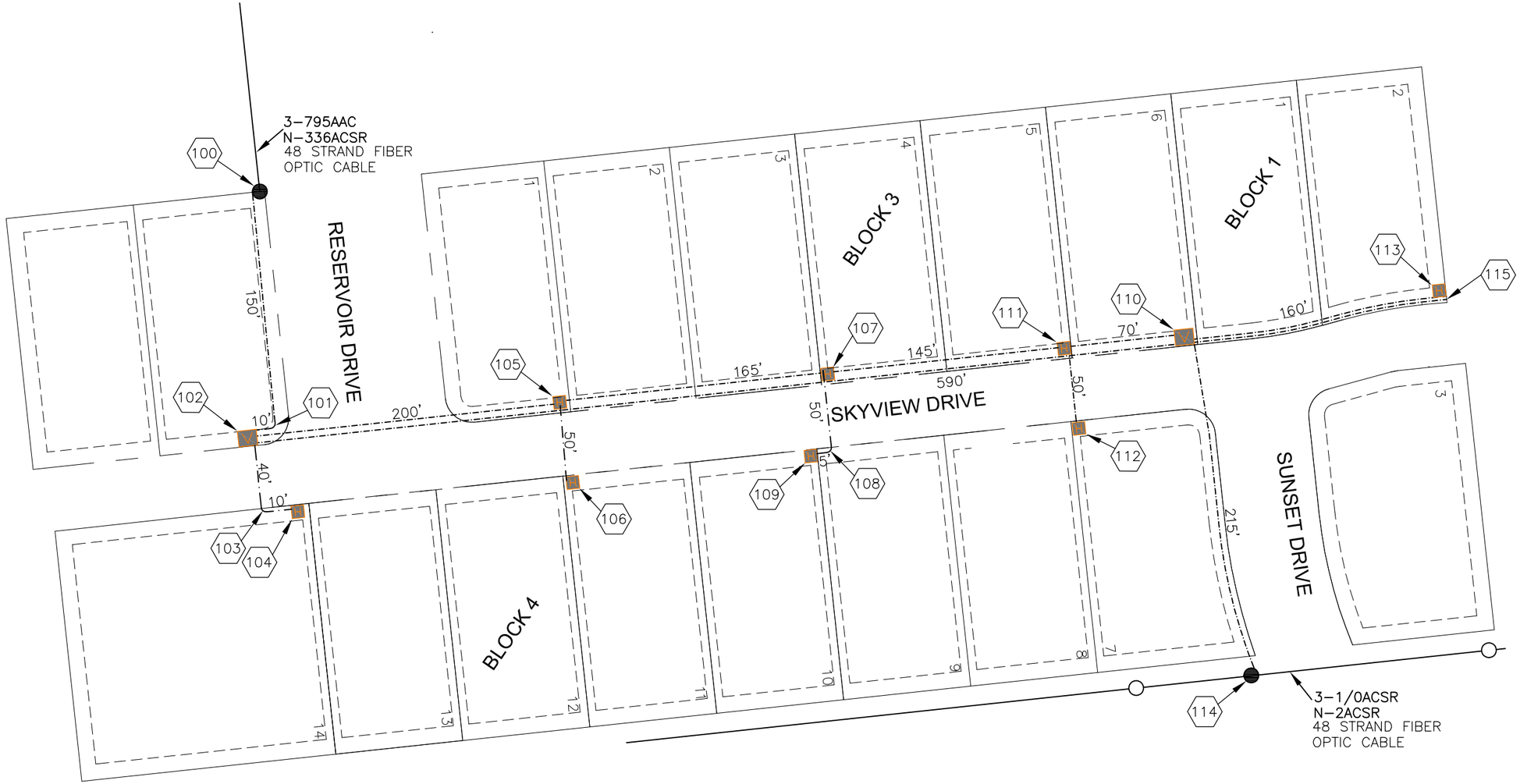

LEGEND

- EXISTING POLE
- NEW POLE
- NEW FIBER VAULT
- NEW FIBER HANDHOLE
- EXISTING FIBER VAULT
- EXISTING FIBER HANDHOLE

- RIGHT OF WAY
- PROPERTY LINE
- PUBLIC UTILITY EASEMENT
- 2" SCH40 PVC ORANGE CONDUIT

CALL BEFORE YOU DIG 48 HOURS IN ADVANCE
DIAL 811 OR (1-800-424-5555)

Grant County PUBLIC UTILITY DISTRICT
Excellence in Service and Leadership
P.O. Box 878
EPHRATA, WASHINGTON 98823
(509)754-5088
www.gcpud.org

REV.	DESCRIPTION	DSN	CHK	ORG	APP1	APP2	DATE
3							
2							
1							
A0	PRELIMINARY New Drawing						

TITLE
YELLOW BOOK
EXHIBIT DRAWING
FIBER LAYOUT

PRELIMINARY
SUB-CATEGORY
CATEGORY

DGS FILE: EXHIBIT-DWG	LAST FILE: 06/25/09	PLOT BY:	PLOT DATE:
DESIGNER: MAB	DRAWN BY: TCY	CHECKED: TCY	DATE: 04/07/09
SHT. of 3	PLOT SCALE: 10	SCALE	DWG SIZE: B

DRAWING NUMBER
EXHIBIT-DWG

ELECTRICAL FRAMING

D
900
GRID #_____-___
3-900A DISC SWITCH
DEVICE #_____

1
45P2 - XHH48 - FM9 - D65 - NO4
3D22HE 6HL5C W22 NOM
3E33 30C5W
3H30F U38SEP
3HL9 5U29E
2U16
U06
2T96
T92

A
T
25
GRID# _____-___
1-37KVA-PAD MT XFMR
7.6KV-120/240V - (PT1437)

11
*U46V-2U84TEP
*2T82 UFIV03
*T83

11A *U79
*T33A

F
GRID# _____-___
3-FUSED CUTOUTS
DEVICE #_____
FUSE @ _____

20
45P2 - X18 - F21 - R05 - NO4
P01 W75 W21 NOM
2P06 5U29
3W13 2U22
3HS3B U06
3HJ2

D D F F
900 900
GRID# _____-___
PME/PSE-9 SWITCH GEAR
(STK.# TDSI-65716709)
DEVICE _____ DEVICE _____
900A DISCONNECT 900A DISCONNECT
DEVICE _____ DEVICE _____
FUSE @ _____ FUSE @ _____

3
*U56SG - 3UDB2
3U84TEP
3U69
TDSI-66945046
600A CAP
*T86
*T84

4
*U55V - 3U59
10U84TEP
7UFIV03
2U69
*3T84
*T82

5
*U55V - 3U59
6U84TEP
3UFIV03
6U69
*2T84

ABC
T
225
GRID# _____-___
1-225KVA-PAD MT XFMR
13.2/7.6KV-240/480V
(QT1122)

7
*U47V-2U84TEP
*3T82 UFIV03
*2T83

A
T
37
GRID# _____-___

9
*U46V-2U84TEP
*2T82 UFIV03
*2T83

9A *U79
*T33A

9B *U79
*T33A

A
T
37
GRID# _____-___
1-37KVA-PAD MT XFMR
7.6KV-120/240V - (PT1437)

12
*U46V-2U84TEP
*2T82 UFIV03
*2T83

12A *U79
*T33A

12B *U79
*T33A

A
T
37
GRID# _____-___
1-37KVA-PAD MT XFMR
7.6KV-120/240V - (PT1437)

14
*U46V-2U84TEP
*2T82 UFIV03
*2T83

14A *U79
*T33A

14B *U79
*T33A

16
0 - 4U69
0 - 4U84TEP
*T84
*T82

C
T
12891
37
17
0 - *2T83

17A *U79
*T33A

STREET LIGHTS

17B
STEEL STREET #_____
LDB40 - LA15 - *LV - LF1
L40 LW U51

FIBER FRAMING

102 **J230 - **4JT32

104 **JU78 - **JT32

105 **JU78 - **3JT32

106 **JU78 - **JT32

107 **JU78 - **3JT32

109 **JU78 - **JT32

110 **J230 - **5JT32

111 **JU78 - **3JT32

112 **JU78 - **JT32

113 **JU78 - **JT32

DISTRICT PROVIDED AND INSTALLED.
* SUPPLIED & INSTALLED BY THE DEVELOPER.
** DISTRICT PROVIDED, DEVELOPER INSTALLED.

CALL BEFORE YOU DIG 48 HOURS IN ADVANCE
DIAL 811 OR (1-800-424-5555)

Grant County PUBLIC UTILITY DISTRICT
Excellence in Service and Leadership
P.O. Box 878
EPHRATA, WASHINGTON 98823
(509)754-5088
www.gcpud.org

REV.	DESCRIPTION	DSN	CHK	ORG	APP1	APP2	DATE
3							
2							
1							
AO	PRELIMINARY New Drawing						

YELLOW BOOK
EXHIBIT DRAWING
FRAMING DRAWING

TITLE
PRELIMINARY
SUB-CATEGORY
CATEGORY
DGS FILE: EXHIBIT-DWG
DESIGNER MAB
ORIGINATOR TCY
CHECKER TCY
DATE 04/07/09
SHT. 4 of 10
LAST FILE: 06/25/09
PLOT SCALE
PLOT BY:
PLOT DATE:
DWG SIZE B
DRAWING NUMBER
EXHIBIT-DWG

ELECTRICAL SCHEDULES

6" CONDUIT SCHEDULE CUSTOMER PROVIDED & INSTALLED			
LOC	LOC	DESCRIPTION	DISTANCE
1	3	2-6" SCH 40 PVC	240'
3	19	2-6" SCH 40 PVC	650'
TOTAL 6" SCH 40 PVC CONDUIT			990'x2=1880'

3 PHASE PRIMARY CONDUCTOR SCHEDULE PUD PROVIDED & INSTALLED			
LOC	LOC	DESCRIPTION	DISTANCE
1	3	3-110AL-15KV (A08C3E)	45'+240'+20'=305'
		3-110AL-15KV (A08C3E)	TOTAL = 305'

6" SWEEP SCHEDULE CUSTOMER PROVIDED & INSTALLED		
LOC	DESCRIPTION	QTY
2,18	6" FIBERGLASS-36" RAD-90°	2
TOTAL 6" FIBERGLASS-36" RAD-90°		4

3" SECONDARY CONDUIT SCHEDULE CUSTOMER PROVIDED & INSTALLED			
LOC	LOC	DESCRIPTION	DISTANCE
9	9A	3" SCH 40 PVC CONDUIT	3'
9	9B	3" SCH 40 PVC CONDUIT	80'
11	11A	3" SCH 40 PVC CONDUIT	3'
12	12A	3" SCH 40 PVC CONDUIT	3'
12	12B	3" SCH 40 PVC CONDUIT	60'
14	14A	3" SCH 40 PVC CONDUIT	3'
14	14B	3" SCH 40 PVC CONDUIT	80'
17	17A	3" SCH 40 PVC CONDUIT	80'
TOTAL 3" SCH 40 PVC CONDUIT			312'

4" CONDUIT SCHEDULE CUSTOMER PROVIDED & INSTALLED			
LOC	LOC	DESCRIPTION	DISTANCE
3	4	4" SCH 40 PVC	10'
4	5	4" SCH 40 PVC	120'
5	7	4" SCH 40 PVC	65'
4	16	4" SCH 40 PVC	420'
16	20	4" SCH 40 PVC	220'
TOTAL 4" SCH 40 CONDUIT			835'

3 PHASE PRIMARY CONDUCTOR SCHEDULE PUD PROVIDED & INSTALLED			
LOC	LOC	DESCRIPTION	DISTANCE
3	4	3-1/0AL-EPR-15KV (A01C3E)	20+10'+20'=50'
4	5	3-1/0AL-EPR-15KV (A01C3E)	20+120'+20'=160'
5	7	3-1/0AL-EPR-15KV (A01C3E)	20+65'+20'=105'
4	16	3-1/0AL-EPR-15KV (A01C3E)	20+420'+20'=460'
16	20	3-1/0AL-EPR-15KV (A01C3E)	20+220'+45'=285'
		3-1/0AL-EPR-15KV (A01C3E)	TOTAL=1,060'

4" SWEEP SCHEDULE CUSTOMER PROVIDED & INSTALLED		
LOC	DESCRIPTION	QTY
6	4" FIBERGLASS-36" RAD-90°	1
TOTAL 4" FIBERGLASS-36" RAD-90°		1

SECONDARY CONDUCTOR SCHEDULE CONTINUED			
LOC	LOC	DESCRIPTION	DISTANCE
9	9A	350 AL TX UG (A36C)	5'+3'+5'=13'
9	9B	350 AL TX UG (A36C)	5'+80'+5'=90'
11	11A	350 AL TX UG (A36C)	5'+3'+5'=13'
12	12A	350 AL TX UG (A36C)	5'+3'+5'=13'
12	12B	350 AL TX UG (A36C)	5'+60'+5'=70'
14	14A	350 AL TX UG (A36C)	5'+3'+5'=13'
14	14B	350 AL TX UG (A36C)	5'+80'+5'=90'
17	17A	350 AL TX UG (A36C)	5'+80'+5'=90'
TOTAL 350 AL TX UG (A36C)			392'

2" PRIMARY CONDUIT SCHEDULE CUSTOMER PROVIDED & INSTALLED			
LOC	LOC	DESCRIPTION	DISTANCE
4	9	2" SCH 40 PVC	80'
9	11	2" SCH 40 PVC	75'
11	12	2" SCH 40 PVC	155'
12	14	2" SCH 40 PVC	215'
14	16	2" SCH 40 PVC	145'
TOTAL 2" SCH 40 PVC CONDUIT			670'

SINGLE PHASE PRIMARY CONDUCTOR SCHEDULE PUD PROVIDED & INSTALLED			
LOC	LOC	DESCRIPTION	DISTANCE
4	9	1/0AL-EPR-15KV (A01C1E)	20'+80'+5'=105'
9	11	1/0AL-EPR-15KV (A01C1E)	5'+75'+5'=85'
11	12	1/0AL-EPR-15KV (A01C1E)	5'+155'+5'=165'
12	14	1/0AL-EPR-15KV (A01C1E)	5'+215'+5'=225'
14	16	1/0AL-EPR-15KV (A01C1E)	5'+145'+20'=130'
		1/0AL-EPR-15KV (A01C1E)	TOTAL = 710'

2" SWEEP SCHEDULE CUSTOMER PROVIDED & INSTALLED		
LOC	DESCRIPTION	QTY
8,10,13,15	2" FIBERGLASS-36" RAD-90°	4
TOTAL 2" FIBERGLASS-36" RAD-90°		4

2" STREET LIGHT CONDUIT SCHEDULE CUSTOMER PROVIDED & INSTALLED			
LOC	LOC	DESCRIPTION	DISTANCE
17	17B	2" SCH 40 PVC CONDUIT	105'
TOTAL 2" SCH 40 PVC CONDUIT			105'

STREET LIGHT CONDUCTOR SCHEDULE PUD PROVIDED & INSTALLED			
LOC	LOC	DESCRIPTION	DISTANCE
17	17B	3 - #2 AL (A30C)	5'+105'+40'=150'
		#2 AL (A30C)	TOTAL = 300'

FIBER SCHEDULES

2" FI. OP. (ORANGE) CONDUIT SCHEDULE PUD PROVIDED - CUSTOMER INSTALLED			
LOC	LOC	DESCRIPTION	DISTANCE
100	102	2" SCH 40 PVC W/#12 THH WIRE	160'
102	104	2" SCH 40 PVC W/#12 THH WIRE	50'
102	105	2" SCH 40 PVC W/#12 THH WIRE	200'
105	106	2" SCH 40 PVC W/#12 THH WIRE	50'
105	107	2" SCH 40 PVC W/#12 THH WIRE	165'
107	108	2" SCH 40 PVC W/#12 THH WIRE	55'
107	111	2" SCH 40 PVC W/#12 THH WIRE	145'
102	110	2" SCH 40 PVC W/#12 THH WIRE	590'
110	111	2" SCH 40 PVC W/#12 THH WIRE	70'
111	112	2" SCH 40 PVC W/#12 THH WIRE	50'
110	113	2" SCH 40 PVC W/#12 THH WIRE	160'
110	114	2" SCH 40 PVC W/#12 THH WIRE	215'
110	115	2" SCH 40 PVC W/#12 THH WIRE	160'
TOTAL 2" SCH 40 PVC (ORANGE)(J085)			2,070'
TOTAL #12 THH TRACER WIRE (J088)			2,350'

2" FI. OP. (ORANGE) CONDUIT SWEEP SCHEDULE PUD PROVIDED - CUSTOMER INSTALLED		
LOC	DESCRIPTION	QTY
101,103,108	2" SCH 40 PVC-36" RAD-90°	1
TOTAL 2" SCH 40 PVC SWEEPS-36" RAD-90°		3

SEE FRAMING SHEET FOR OTHER SWEEP LOCATIONS (JT32)

CALL BEFORE YOU DIG 48 HOURS IN ADVANCE
DIAL 811 OR (1-800-424-5555)

Grant County PUBLIC UTILITY DISTRICT
Excellence in Service and Leadership
P.O. Box 878
EPHRATA, WASHINGTON 98823
(509)754-5088
www.gcpud.org

REV.	DESCRIPTION	DSN	CHK	ORG	APP1	APP2	DATE
3							
2							
1							
A0	PRELIMINARY New Drawing						

TITLE
YELLOW BOOK
EXHIBIT DRAWING
SCHEDULES DRAWING

PRELIMINARY
SUB-CATEGORY
CATEGORY
DGS FILE: EXHIBIT-DWG
LAST FILE: 06/25/09
PLOT BY:
PLOT DATE:
DESIGNER: MAB
ORIGINATOR: TCY
CHECKER: TCY
DATE: 04/07/09
SHT. 5 of 10
PLOT SCALE
SCALE
DWG SIZE: B
DRAWING NUMBER
EXHIBIT-DWG

Prototype Drawings:
1PHASE
3PHASE
UGSCHEMB
UGSCHEMD

Use ortho mode when applicable. Schematic blocks are designed to be used with SNAP set to .05 x drawing scale. Make sure converging lines meet. Use District's blocks, linetypes, layers. Do not create any new entities. Use example for text styles and heights. All dimensions are from edge of vault to edge of vault, not conductor lengths. Purge the drawing when finished, zoom extents and plot to .dwf.

All text height is 0.125, style ROMANS unless noted.

County Road Names:
"K" S.E. - No road exists.
CO. RD. "K" S.E. - Road exists.

Dimension to section corners where applicable.

Layers
Text - UGTEXT
Conductor - A, B or C
Blocks - UGSCHEM
DDI Numbers - DDINUMBER
Multiple numbers in lower right
WOs - WOHISTRY
Normal Opens - OPEN-TXT

Normal Opens: Pull conductor off bus .05 inside vault, .1 outside vault. Add perpendicular line .1 in length to end of conductor. Place cable tag and "normal open at..." (vault or pad) on OPEN-TXT layer.

Vaults: Source lands inside vault, feeds are drawn from outside vault. Center B Phase coming into vault, offset A and C phase 0.2 from B.

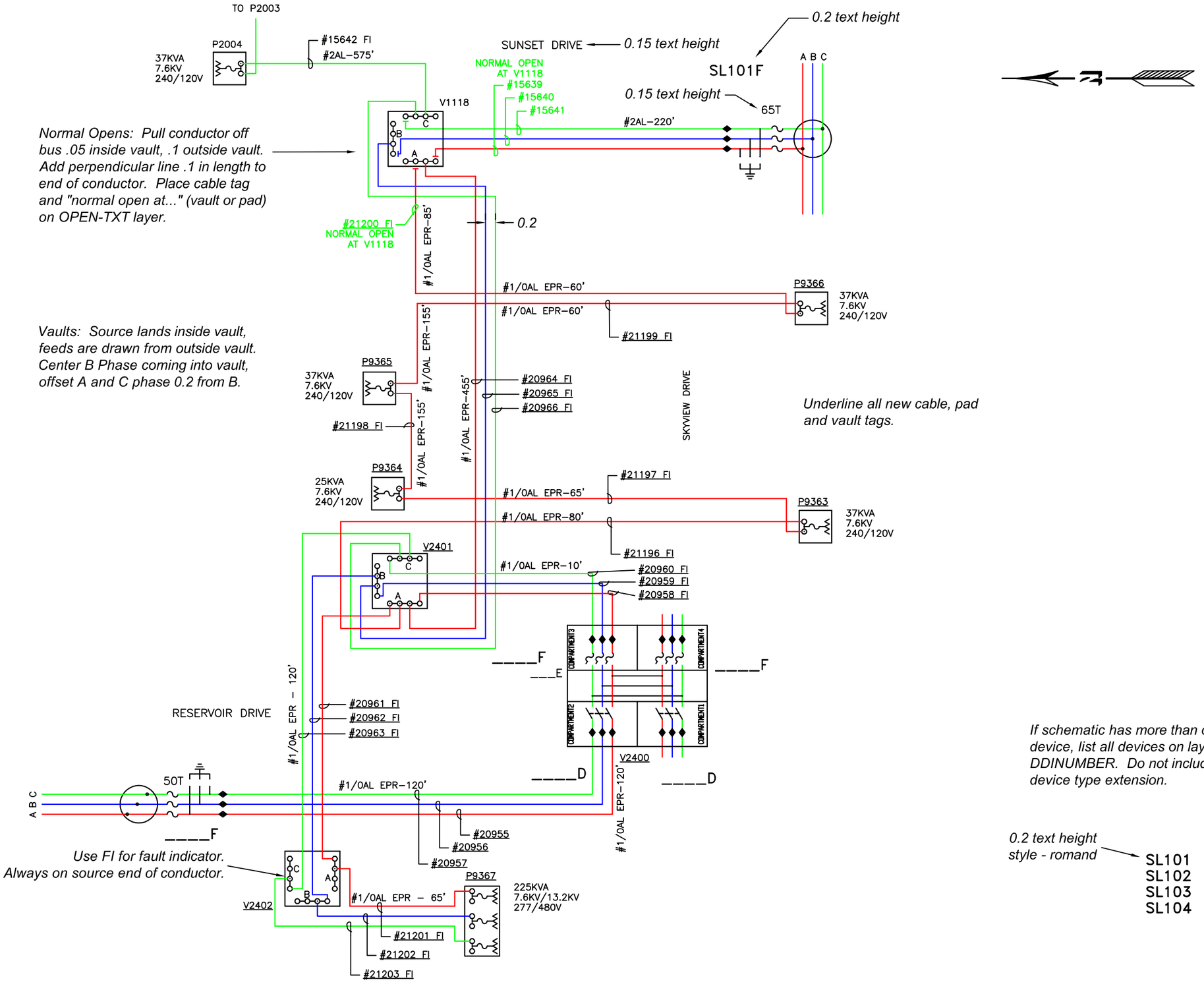

Underline all new cable, pad and vault tags.

If schematic has more than one device, list all devices on layer DDINUMBER. Do not include device type extension.

0.2 text height
style - romand

SL101
SL102
SL103
SL104

Grant County PUBLIC UTILITY DISTRICT
Excellence in Service and Leadership
P.O. Box 878
EPHRATA, WASHINGTON 98823
(509)754-5088
www.gcpud.org

REV.	DESCRIPTION	DSN	CHK	ORG	APP1	APP2	DATE
3							
2							
1							
A0	PRELIMINARY New Drawing						

TITLE
YELLOW BOOK
EXHIBIT DRAWING
UNDERGROUND SCHEMATIC

PRELIMINARY

CATEGORY
SUB-CATEGORY
DOS FILE: EXHIBIT-DWG
DESIGNER: SMA
ORIGINATOR: TCY
CHECKER: MAB
DATE: 06/24/09
LAST FILE: 06/25/09
SHT. of 6 10
PLOT SCALE
PLOT BY:
PLOT DATE:
DWG SIZE: D
DRAWING NUMBER: EXHIBIT-DWG

TYPICAL TRENCH CONSTRUCTION

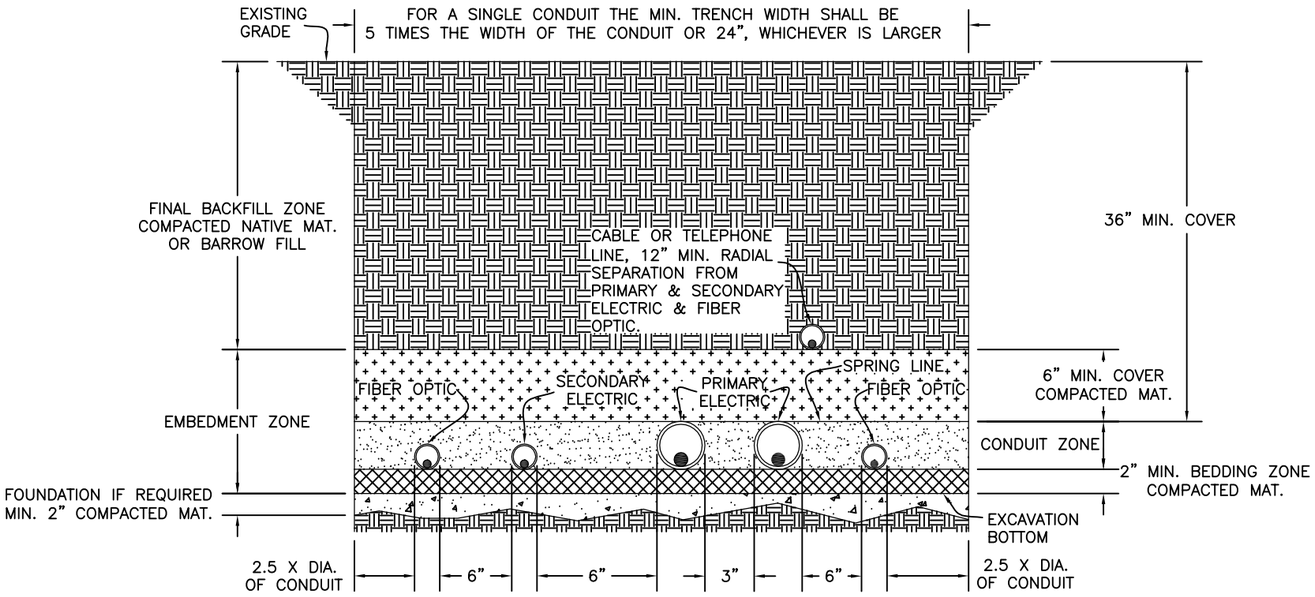

MULTI–CONDUITS SHALL BE CONFIGURED AS SHOWN.

NOTE:
ALL TRENCHING, TRENCH LOCATION IN REFERENCE TO OTHER UTILITIES, CONDUIT LOCATION WITHIN THE TRENCH, BACKFILL AND COMPACTION OF BACKFILL SHALL BE IN ACCORDANCE WITH ASTM INTERNATIONAL STANDARDS.

NOT TO SCALE

CONCRETE ENCASED CONSTRUCTION

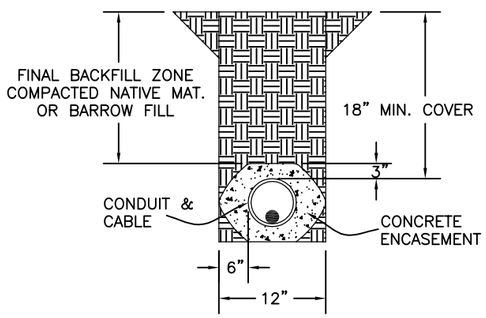

NOTE:
THIS METHOD OF REDUCED CLEARANCES IS ONLY ACCEPTABLE WITH PRIOR APPROVAL OF DISTRICT STAFF.
CONDUIT SHALL REST ON EITHER CONCRETE OR SUITABLE FOUNDATION.
CONCRETE ENCASEMENT SHALL BE A FOUR SACK MIX.

NOT TO SCALE

NOTES:

1. CUSTOMER TO PROVIDE ALL TRENCH, BACKFILL, CONDUIT, BEDDING, CONCRETE TRANSFORMER VAULTS, SWITCHING VAULTS, MOPEDS AND HAND HOLES TO GRANT COUNTY PUD SPECIFICATIONS.

2. INSTALL CAP AT END OF SPARE CONDUITS.

3. COORDINATE CONSTRUCTION WITH AREA LINE FOREMAN PHONE:

4. DEVELOPER TO PROVIDE ALL LOT CORNERS AND GRADE STAKES FOR CONSTRUCTION AND STAKING OF BURIED POWER LINES.

5. ALL SWITCHING VAULTS, TRANSFORMER VAULTS, AND HAND HOLES ARE TO BE INSTALLED AT FINAL GRADE PER GRANT COUNTY P.U.D. STANDARDS.

6. DEVELOPER TO COORDINATE WITH OTHER UTILITIES.

7. WARNING TAPE TO BE INSTALLED IN ALL TRENCHES 12"–16" ABOVE THE CONDUIT.

8. WARNING TAPE TO BE INSTALLED OVER ALL CONDUITS EXPOSED ABOVE FINAL GRADE.

9. P.U.D. MUST INSPECT AND APPROVE ALL CONDUITS AND VAULTS BEFORE BACKFILL.

10. OBTAIN FIBER OPTIC CONDUIT, VAULTS, AND HAND HOLES FROM GRANT COUNTY P.U.D. AND INSTALL PER GRANT COUNTY P.U.D. STANDARDS.

CALL BEFORE YOU DIG 48 HOURS IN ADVANCE
DIAL 811 OR (1–800–424–5555)

TYPICAL COMMON TRENCH DETAIL

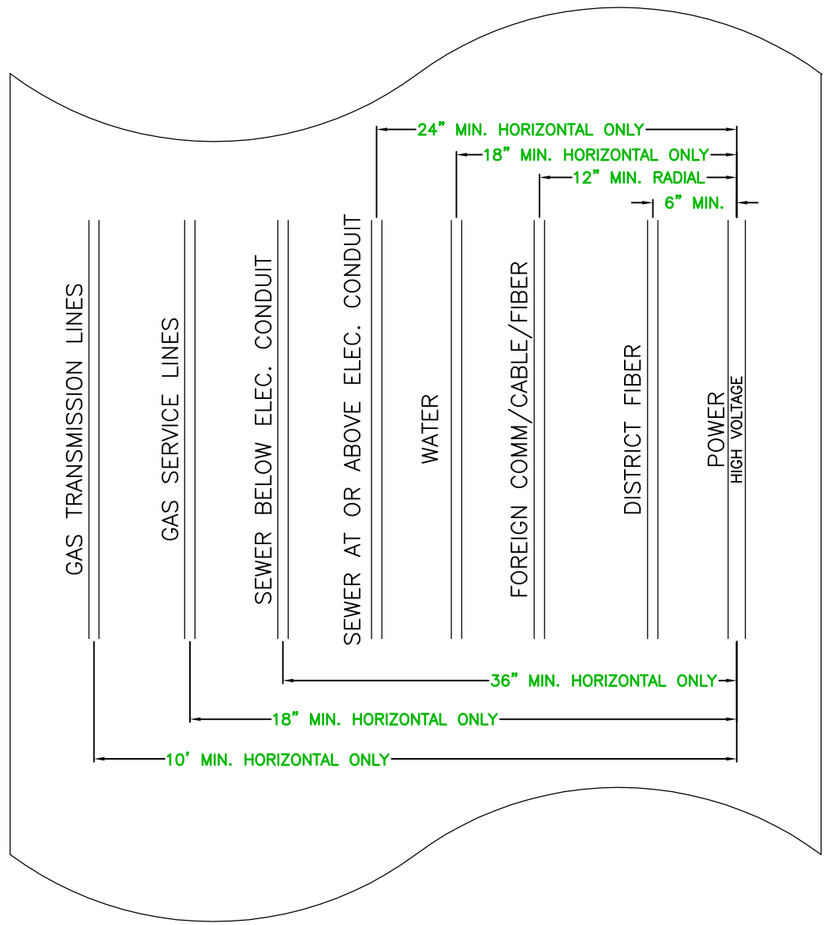

NOTE:
LOW VOLTAGE 120/240V REQUIRES 12" RADIAL SEPARATION FOR TELEPHONE OR TELEVISON–CABLE, 6" FOR DISTRICT FIBER, AND 12" FOR FOREIGN FIBER.

NOT TO SCALE

CONDUIT SPECIFICATIONS:

1. CONDUITS TO BE CENTERED AND ALIGNED TO PULL POWER CABLES DIRECTLY THROUGH KNOCKOUT ACCESS OPENING OF THE TRANSFORMER VAULT OR SWITCHING VAULT @ APPROXIMATELY 4" ABOVE INSIDE GRADE. PRIMARY CONDUITS SHALL ENTER AND EXIT @ OPPOSITE CORNERS OF VAULTS.

2. ALL MEDIUM HIGH VOLTAGE 36" RADIUS SWEEPS MUST BE MODIFIED TO EXTEND JUST ABOVE INSIDE GRADE @ TRANSFORMER VAULT OR SWITCH VAULT LOCATIONS.

3. USE FIBERGLASS OR GALV. STEEL SWEEPS FOR ALL PRIMARY CONDUIT.

Grant County PUBLIC UTILITY DISTRICT
Excellence in Service and Leadership
P.O. Box 878
EPHRATA, WASHINGTON 98823
(509)754-5088
www.gcpud.org

REV.	DESCRIPTION	DSN	CHK	ORG	APP1	APP2	DATE
3							
2							
1							
A0	PRELIMINARY New Drawing						

YELLOW BOOK
EXHIBIT DRAWING
DETAIL LAYOUT 1

TITLE

PRELIMINARY

CATEGORY

SUB–CATEGORY

DWG FILE: EXHIBIT–DWG
DESIGNER: MAB
ORIGINATOR: TCY
CHECKER: TCY
DATE: 04/07/09
DRAWING NUMBER

LAST FILE: 06/25/09
SHT. of 10
PLOT SCALE
PLOT BY:
PLOT DATE:
DWG SIZE: B

EXHIBIT–DWG

PEDESTAL CONSTRUCTION DETAIL

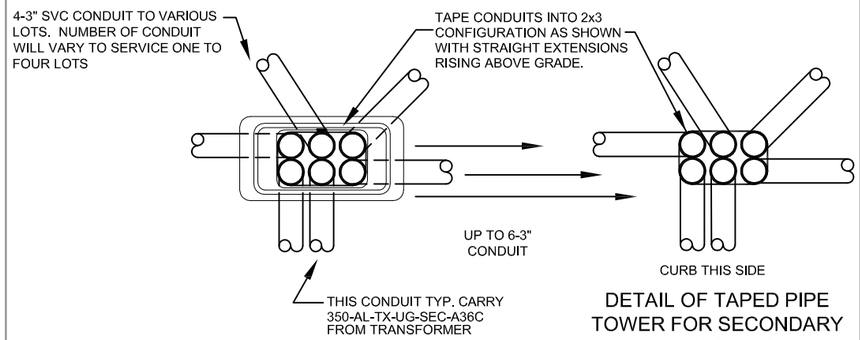

DETAIL OF TAPED PIPE TOWER FOR SECONDARY PEDESTALS

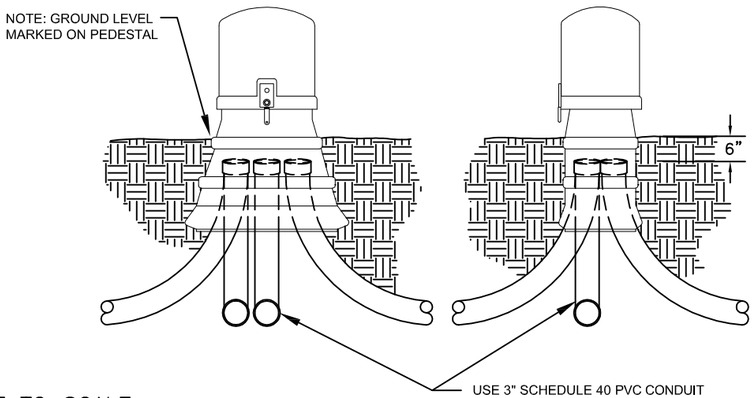

NOT TO SCALE

FIBER HANDHOLE CONSTRUCTION DETAIL

- INSTALL FIBER CONDUIT WITHIN THE FIBER HANDHOLE IN A SIMILAR FASHION AS THE PEDESTAL CONSTRUCTION DETAIL ABOVE.
- LEAVE THE LID OF THE FIBER HANDHOLE 3" ABOVE FINAL GRADE TO ALLOW FOR LANDSCAPING.

STREET LIGHT & HAND HOLE PLACEMENT

PROFILE VIEW

NOTE:

–LIGHT POLE, ARM, LUMINAIRE & WIRING TO BE SUPPLIED & INSTALLED BY GRANT COUNTY P.U.D.

–ARM AND LUMINAIRE SHALL BE PERPENDICULAR TO BACK OF SIDEWALK OR CURB FACING THE MAIN TRAVELED WAY.

*TO BE SUPPLIED & INSTALLED BY CUSTOMER.

HDPE SPECIFICATIONS:

*HANCOR SURE–LOK PIPE OR EQUAL SHALL BE NON–PERFORATED, SMOOTH WALL INTERIOR, AND ANNULAR CORRUGATED EXTERIOR MEETING THE REQUIREMENTS OF AASHTO M294, TYPE S OR ASTM F2306 TESTING. WITH A CELL CLASSIFICATION OF 435400C AS DEFINED IN ASTM D3350.

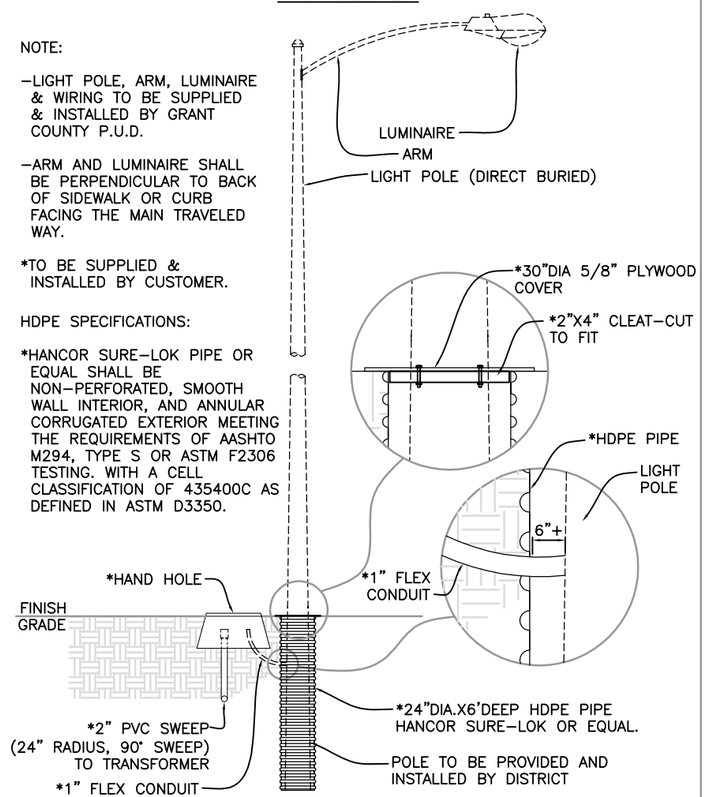

NOT TO SCALE

NOTES:

1. CUSTOMER TO PROVIDE ALL TRENCH, BACKFILL, CONDUIT, BEDDING, CONCRETE TRANSFORMER VAULTS, SWITCHING VAULTS, MOPEDS AND HAND HOLES TO GRANT COUNTY PUD SPECIFICATIONS.

2. INSTALL CAP AT END OF SPARE CONDUITS.

3. CORDINATE CONSTRUCTION WITH AREA LINE FOREMAN PHONE:

4. DEVELOPER TO PROVIDE ALL LOT CORNERS AND GRADE STAKES FOR CONSTRUCTION AND STAKING OF BURIED POWER LINES.

5. ALL SWITCHING VAULTS, TRANSFORMER VAULTS, AND HAND HOLES ARE TO BE INSTALLED AT FINAL GRADE PER GRANT COUNTY P.U.D. STANDARDS.

6. DEVELOPER TO COORDINATE WITH OTHER UTILITIES.

7. WARNING TAPE TO BE INSTALLED IN ALL TRENCHES 12"–16" ABOVE THE CONDUIT.

8. WARNING TAPE TO BE INSTALLED OVER ALL CONDUITS EXPOSED ABOVE FINAL GRADE.

9. P.U.D. MUST INSPECT AND APPROVE ALL CONDUITS AND VAULTS BEFORE BACKFILL.

10. OBTAIN FIBER OPTIC CONDUIT, VAULTS, AND HAND HOLES FROM GRANT COUNTY P.U.D. AND INSTALL PER GRANT COUNTY P.U.D. STANDARDS.

CONDUIT SPECIFICATIONS:

1. CONDUITS TO BE CENTERED AND ALIGNED TO PULL POWER CABLES DIRECTLY THROUGH KNOCKOUT ACCESS OPENING OF THE TRANSFORMER VAULT OR SWITCHING VAULT @ APPROXIMATELY 4" ABOVE INSIDE GRADE. PRIMARY CONDUITS SHALL ENTER AND EXIT @ OPPOSITE CORNERS OF VAULTS.

2. ALL MEDIUM HIGH VOLTAGE 36" RADIUS SWEEPS MUST BE MODIFIED TO EXTEND JUST ABOVE INSIDE GRADE @ TRANSFORMER VAULT OR SWITCH VAULT LOCATIONS.

3. USE FIBERGLASS OR GALV. STEEL SWEEPS FOR ALL PRIMARY CONDUIT.

U46V – PEDESTAL

SECTION DETAIL

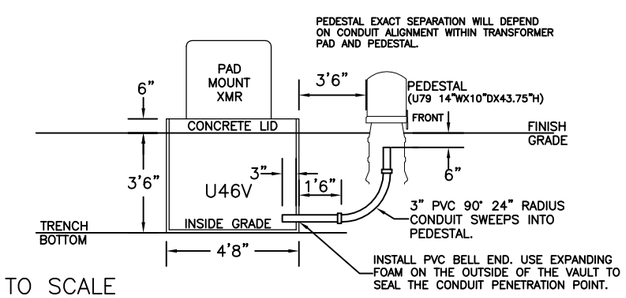

NOT TO SCALE

CALL BEFORE YOU DIG 48 HOURS IN ADVANCE
DIAL 811 OR (1–800–424–5555)

Grant County PUBLIC UTILITY DISTRICT
Excellence in Service and Leadership
P.O. Box 878
EPHRATA, WASHINGTON 98823
(509)754–5088
www.gcpud.org

REV.	DESCRIPTION	DSN	CHK	ORG	APP1	APP2	DATE
3							
2							
1							
A0	PRELIMINARY New Drawing						

TITLE
YELLOW BOOK
EXHIBIT DRAWING
DETAIL LAYOUT 2

PRELIMINARY
SUB–CATEGORY
CATEGORY

DGN FILE:	EXHIBIT–DWG	LAST FILE: 06/25/09	PLOT DATE
DESIGNER: MAB	ORIGINATOR: TCY	CHECKER: TCY	DATE: 04/07/09
		SHT. 8 of 10	PLOT SCALE
			PLOT BY:
	DRAWING NUMBER: EXHIBIT–DWG		DWG SIZE: B

TYPICAL FIBER HAND HOLE/TRANSFORMER MOPED/STREET LIGHT/SWITCH VAULT PLACEMENT

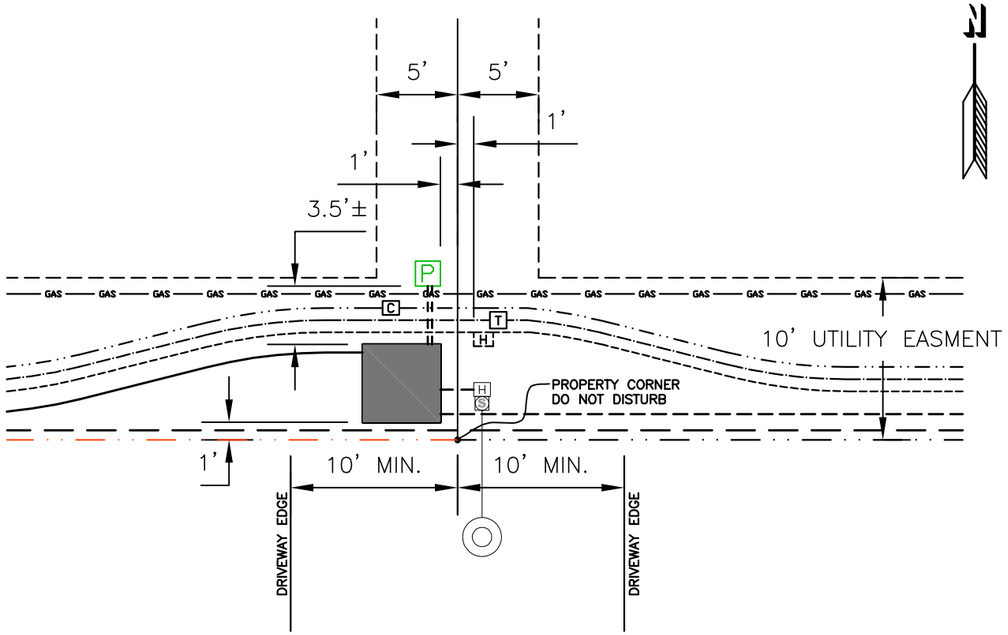

GAS LINE
TELEPHONE, 4" PVC CONDUIT
CABLE, 2" PVC CONDUIT
FIBER OPTIC, 2" PVC CONDUIT
SECONDARY 3" PVC CONDUIT
STREET LIGHT, 2" PVC CONDUIT
SINGLE PHASE PRIMARY 2" PVC CONDUIT
THREE PHASE PRIMARY 4" PVC CONDUIT
PROPERTY LINE
UTILITY EASMENT
ROAD CENTER LINE
RIGHT OF WAY: RIGHT OF WAY LINE POSITION SHOWN VARIES WITH ROAD WIDTH.

U46V, TRANSFORMER PAD 4'8"SQX3'6"H W/OUT COVER
U54V, 1 PHASE SWITCHING VAULT 4'8"SQX3'6"H W/OUT COVER
U55V, 3 PHASE SWITCHING VAULT 6'LX4'WX4'H W/OUT COVER
U79, MO-PED 14"WX10"DX43.75"H
JU78, FIBER HAND HOLE 14"LX10"WX8"H
TELEPHONE PEDESTAL
CABLE PEDESTAL
STREET LIGHT & HAND HOLE

CALL BEFORE YOU DIG 48 HOURS IN ADVANCE
DIAL 811 OR (1-800-424-5555)

NOT TO SCALE

TYPICAL FIBER VAULT/TRANSFORMER MOPED/STREET LIGHT/SWITCH VAULT PLACEMENT

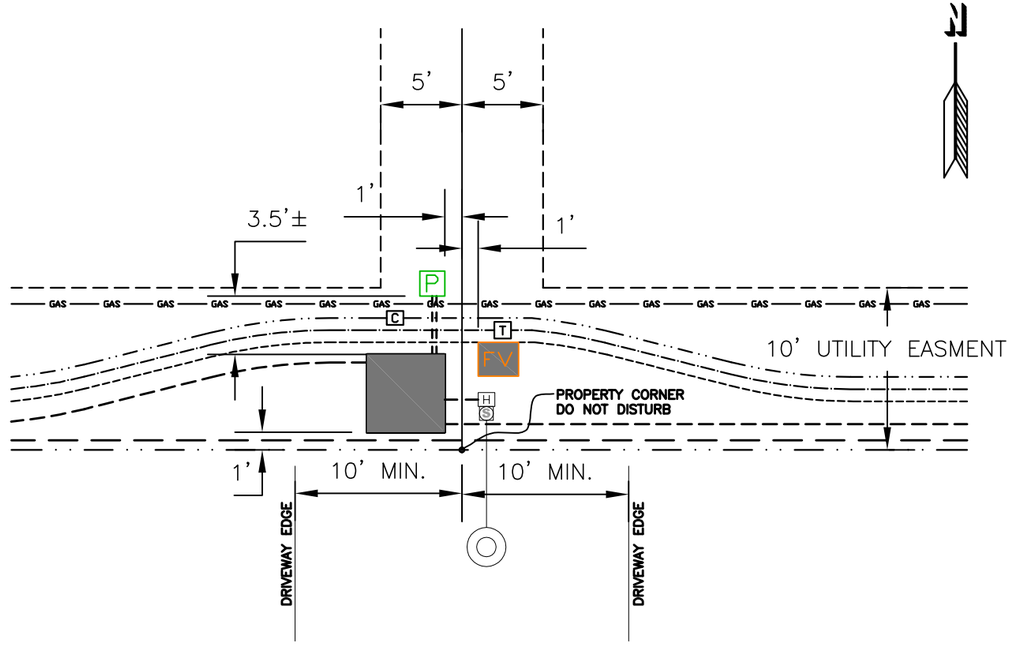

GAS LINE
TELEPHONE, 4" PVC CONDUIT
CABLE, 2" PVC CONDUIT
FIBER OPTIC, 2" PVC CONDUIT
SECONDARY 3" PVC CONDUIT
STREET LIGHT, 2" PVC CONDUIT
SINGLE PHASE PRIMARY 2" PVC CONDUIT
THREE PHASE PRIMARY 4" PVC CONDUIT
PROPERTY LINE
UTILITY EASMENT
ROAD CENTER LINE
RIGHT OF WAY: RIGHT OF WAY LINE POSITION SHOWN VARIES WITH ROAD WIDTH.

U46V, TRANSFORMER PAD 4'8"SQX3'6"H W/OUT COVER
U54V, 1 PHASE SWITCHING VAULT 4'8"SQX3'6"H W/OUT COVER
U55V, 3 PHASE SWITCHING VAULT 6'LX4'WX4'H W/OUT COVER
U79, MO-PED 14"WX10"DX43.75"H
J230, FIBER VAULT 48"LX42"WX32"H
TELEPHONE PEDESTAL
CABLE PEDESTAL
STREET LIGHT & HAND HOLE

CALL BEFORE YOU DIG 48 HOURS IN ADVANCE
DIAL 811 OR (1-800-424-5555)

NOT TO SCALE

Grant County PUBLIC UTILITY DISTRICT
Excellence in Service and Leadership
P.O. Box 878
EPHRATA, WASHINGTON 98823
(509)754-5088
www.gcpud.org

REV.	DESCRIPTION	DSN	CHK	ORG	APP1	APP2	DATE
3							
2							
1	PRELIMINARY New Drawing						
A0							

TITLE
YELLOW BOOK
EXHIBIT DRAWING
DETAIL LAYOUT 3

PRELIMINARY

CATEGORY	
SUB-CATEGORY	
DGS FILE:	EXHIBIT-DWG
DESIGNER	MAB
ORIGINATOR	TCY
CHECKER	TCY
DATE:	04/07/09
LAST FILE:	06/25/09
SHT. # of	9 10
PLOT SCALE	
PLOT BY:	
PLOT DATE	
DWG SIZE	B
DRAWING NUMBER	EXHIBIT-DWG

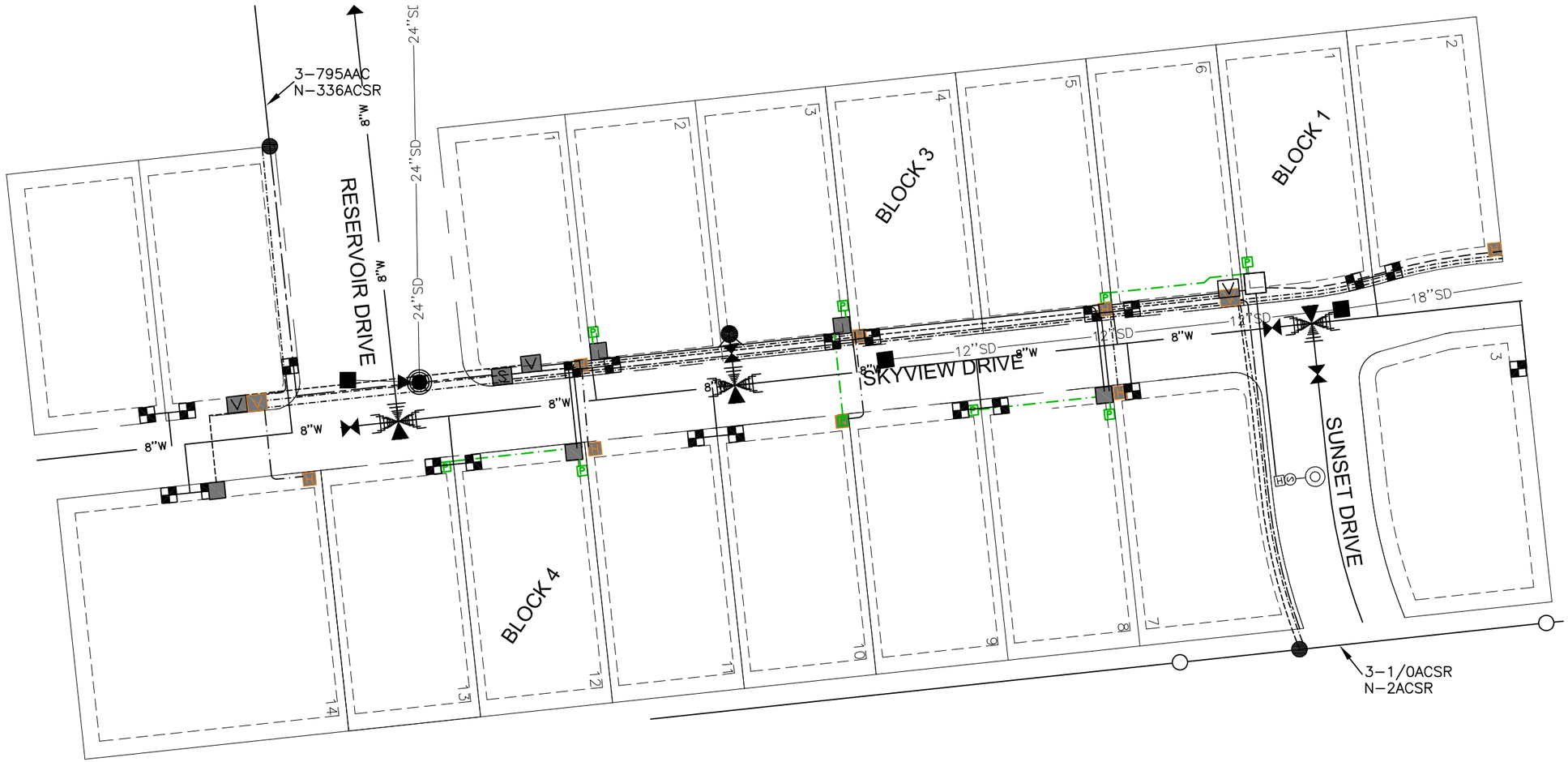

CIVIL LEGEND

- WATER SERVICE
- STORM DRAIN
- STORM DRAIN MANHOLE
- FIRE HYDRANT
- WATER VALVE
- WATER TEE
- 24"SD — 24" STORMDRAIN
- 18"SD — 18" STORMDRAIN
- 12"SD — 12" STORMDRAIN
- 8"W — 8"WATER LINE

LEGEND

- NEW SWITCH VAULT
- EXISTING SWITCH VAULT
- NEW SWITCHGEAR VAULT
- EXISTING SWITCHGEAR VAULT
- NEW TRANSFORMER
- EXISTING TRANSFORMER
- PEDESTAL
- NEW STREET LIGHT & HAND HOLE
- RIGHT OF WAY
- PROPERTY LINE
- PUBLIC UTILITY EASEMENT
- 2" SCH40 PVC CONDUIT
- 3" SCH40 PVC CONDUIT
- 4" SCH40 PVC CONDUIT
- 6" SCH40 PVC CONDUIT
- EXST. 1-PHASE POWER (IN CONDUIT)
- EXST. 3-PHASE POWER (IN CONDUIT)

Grant County
PUBLIC UTILITY DISTRICT
Excellence in Service and Leadership
P.O. Box 878
EPHRATA, WASHINGTON 98823
(509)754-5088
www.gcpud.org

REV.	DESCRIPTION	DSN	CHK	ORG	APP1	APP2	DATE
3							
2							
1							
A0	PRELIMINARY New Drawing						

TITLE
YELLOW BOOK
EXHIBIT DRAWING
ALL COMBINED LAYOUT

CATEGORY: PRELIMINARY
SUB-CATEGORY:
DGS FILE: EXHIBIT-DWG
DESIGNER: MAB
ORIGINATOR: TCY
CHECKER: TCY
DATE: 04/07/09
LAST FILE: 06/25/09
SHT. of: 10 10
PLOT BY:
PLOT SCALE:
SCALE:
DWG SIZE: B
PLOT DATE:
DRAWING NUMBER: EXHIBIT-DWG

GCPUD CONSTRUCTION STANDARDS

CONDUIT STANDARDS FOR CUSTOMER WORKBOOKS

Standard Cable Conduit Design and Application

SCOPE

This Construction Standard is intended to point out the special requirements necessary for proper installation of rigid and polyvinyl chloride (PVC) conduit for underground primary (13.2kV) and secondary (600volt) cable installation. This Standard also includes limits of conduit runs and pulling tensions.

1. Electrical Plastic Conduit (EPC-40)
   a. PVC conduit (EPC-40) shall meet all requirements listed in NEMA Standard Publication TC 2, latest editions.

   b. PVC fittings shall meet the requirements of NEMA Standard Publication TC 3 latest editions for Schedule 40 dimensions.

   c. The solvent cement shall meet the requirements of ASTM D 2564 or it shall be in accordance with the conduit manufacturer's recommendations.

2. PVC Conduit Laying

   a. All PVC conduit and fittings to be joined should be exposed to the same temperature conditions for a reasonable length of time before assembly. PVC conduit can expand or contract about 1" to 1-1/2" per 100 feet for every temperature change of 20 degrees.

      Where a large difference between the temperature of the air and soil exists (air to damp trench), consideration should be given to making tie-ins at both manholes or vaults after the conduit bank has been covered a few hours in order to obtain a permanent connection to the manhole or vault.

   b. PVC conduit entrance into manholes or vaults shall be horizontal for a length of 10' prior to being grouted into the inside wall of the manhole or vault. All PVC conduit shall be grouted on entrance to concrete manholes or vaults and end bells installed.

   c. Where sidewall-bearing pressure will exceed 600 pounds, PVC or steel sweeps shall be concrete encased to a point 12 inches beyond the ends of the sweep couplings.

3. Cutting, Conduit and Preparing the Joint

   a. Cutting the conduit square is important to insure a maximum bonding surface and to avoid a gap where the end meets the shoulder of the fitting. A fine - tooth saw shall be used to cut conduit (i.e. hacksaw for conduit 2 inches or less, wood saw for conduit greater than 2 inches). The conduit must be cut straight and cleaned of burrs.

   b. Remove the burrs left by sawing with a knife or file. Remove all sharp edges on the O.D.

and I.D. of the cut with a knife, file or other beveling tool to prevent possible injury to hands during handling and to prevent damage to cable during pulling. If burrs are not removed, inferior joint may result.

c. Using a clean rag, wipe the pipe surface and fitting to be joined. Manufacturers in the process of belling pipe use a silicone release agent on the belling plug, and a residue of this agent can remain inside the bell. This must be removed in the cleaning process.

d. Assembly of a cemented joint should be completed within 15 seconds after application of cement. Initial bonding begins immediately when the cement coated joint surfaces are in position.
If there is any sign of drying of the cement surfaces prior to assembly, precoat the duct spigot with a heavy even coat of cement and IMMEDIATELY, while cement is still wet, insert the spigot into the socket.

4. Conduit Selection

a. The selection of a duct or conduit size for use with a given conductor size is influenced by a number of factors: duct fill, jamming ratio, side pressure, pulling tension, and friction.

TABLE 1. MAXIMUM CONDUIT FILL (SCHEDULE 40)

Conduit Size (Inches)	Inside Diameter (Inches)	1 Cable 53% fill (inches/sq)	2 Cables 31% Fill (inches /sq)	3+ Cables 40% Fill (inches/sq)
1.0	1.049	0.458	0.268	0.346
2.0	2.067	1.778	1.040	1.342
3.0	3.068	3.918	2.292	2.957
4.0	4.026	6.74	3.946	5.092
6.0	6.065	15.312	8.956	11.556

For all sizes, combinations, and types of cable (except lead covered) to be installed in conduit, total cross sectional area taken by cables, including insulation, is not to be greater than the area specified in the table above.

Cable Fill:

Example: 3 each 1/0 primary cable. Diameter of 1/0 primary cable = 1.17 inches.

Area = π $(1.17/2)^2$ = 1.0746

3 Cables = 1.0746 x 3 = 3.22 square inches.

In Table 1, select column with 3 or more cables 40% fill. The 3" conduit exceeds the 40% fill so 4" conduit is selected.

Jamming Ratio:

Conduit I.D./Cable O.D. (Cable O.D for 1 cable)
Check jamming ratio: 4.026/1.17 = 3.44. **Jamming not likely...use 4" conduit.**
If Jamming Ratio is between 2.8 and 3.0 Jamming is probable and a larger size conduit is needed.

Sidewall Load Pressure:

Is the radial force exerted at a bend when cable is being pulled around a bend or sheave? Exceeding the maximum sidewall load may subject the cable to crushing damage.

TABLE 2. MAXIMUM PULLING TENSION LIMITS, EPR 133% INSULATION

Cable Size	Cable O.D (Inches)	Conductor Grip		Basket Grip		Sidewall Bearing Pressure	
		Maximum Tension (lbs)		Maximum Tension (lbs)		Maximum (lbs)	
		Single Cond.	Three Cond.	Single Cond.	Three Cond.	Single Cond.	Three Cond.
1/0	1.17	850	1,650	850	1,000	500	1,000
4/0	1.32	1,700	3,400	1,000	1,000	500	1,000
350	1.50	2,800	5,600	1,000	1,000	500	1,000
750	1.96	6,000	10,000	1,000	1,000	500	1,000
1000	2.15	6,000	10,000	1,000	1,000	500	1,000

b. Guidelines for Conduit Sweeps:

1. **PVC Sweeps:**
All PVC sweeps shall be factory bent. Heating and bending of conduit is **prohibited.**

2. **Steel Sweeps**:
All steel sweeps and fittings shall be hot-dip galvanized. All steel sweeps shall be manufactured with an extrusion process.

3. **Fiberglass Sweeps:**
All fiberglass sweeps shall be equipped with 2 permanently attached deep pvc couplings.

4. **Flex Conduit Sweeps**:
Shall not be used except where specified for street lights.

5. Standard Radii for PVC and Steel Sweeps: The following standard radius sweeps are required as follows:

• Low voltage circuits in 2 and 3 inch conduit 36" radius
(**Exception:** 24" sweep will be allowed to enter a secondary pedestal or other equipment where a 36" sweep will not allow the pulling of cable.)

- Low-voltage circuits in 4 inch conduit 36” radius
- Primary circuits in 2 or 4 inch conduit 36” radius
- Feeder circuits in 6 inch conduit 48” radius
- Individual feeder phases in 3 inch conduit 36” radius

5. Conduit Sweep Bends: Use of fiberglass or rigid steel elbows are required for all ends where conduit extends more than 150 feet in length or contains more then two (2) 90º bends installed by the customer and one (1) bend installed by the District. Total bends shall not exceed 270º.

c. Conduit Termination:

When installing Schedule 40 sweeps for primary and feeder cable at manholes, pull boxes, transformer box pads or transformer pads, a short section (minimum 8 inches) of conduit shall be installed on the end of each sweep to facilitate the use of (fit) the cable blowing (plug) tool. A short straight section of conduit is also required whenever an expandable plug or a “conduit and cable seal plug” is required.

All direct buried conduit to be terminated in the walls of a manhole, pull boxes, shall be approximately perpendicular to the walls and shall be grouted into the walls. After conduits have been properly aligned and terminated, proper compaction shall be attained to prevent shear stress on the conduit(s) at the point of entrance to the manhole or concrete handhole. Conduit(s) shall be terminated into manufacturer installed duct terminators or end bells.

Conduit installed through a building wall or into a customer’s vault shall be sealed (before and after the cable has been installed) internally and externally against the entry of noise, moisture and gas into the building or vault. After pulling primary or feeder cable into conduit, the conduit ends shall be sealed using foam Duo Fill 400 plastic filler.

Where cables exits a buried conduit sleeve or sweep, the cable shall be protected from the sharp conduit edge by chamfering the inside edge of the conduit sleeve or sweep and installing a cable leader guard (bell end). All exposed conduit ends shall be “covered” at the end of each work day to ensure a clean conduit run.

Stub outs or other exposed (above grade or not buried and not inside a locked enclosure) conduit ends that provide access to energized equipment shall be “glued and capped” unless construction crews are present. Conduit plugs (non-expandable type) shall be installed at all buried conduit stub-outs. Expandable conduit plugs shall be installed at all other newly installed conduit ends except where conduit is required to be “glued and capped”.

When a contractor leaves a conduit system (for more than one day) in which “others” will be responsible for installing the cable, any conduit ends left exposed shall be “primered, glued and capped” and conduit ends which are not exposed shall be sealed with expandable conduit plugs.

When a contractor leaves a conduit system temporarily (for more than one day) but is also the responsible party which must later install the cable, then the conduit system can be plugged or can be primered, glued and capped at the contractor's discretion.

Where the Customer installs service conduit prior to the existence of District facilities and thus cannot complete the required connection (tie) to District facilities, the last 8 to 10 feet of the customer installed service conduit shall be left exposed and plugged, to facilitate the later connection to District facilities. Empty conduits which have been stubbed out by District for future attachment to customer may be located and exposed by the customer performing the attachment, provided there are not other District facilities within 2 feet and provided the clearance requirement from poles and anchors are met. To avoid misalignment of conduits when attaching to existing stubbed service conduit, the existing stubbed conduit ends should first be located to determine depth, then adjust the trench depth (if necessary) while trenching towards the service entrance section.

In direct-buried conduit systems, concrete encasement of conduit sweeps is required wherever the sidewall bearing pressure exceeds 600 pounds. The encasement shall be a minimum of 3 inches thick surrounding the sweeps and shall extend 12 inches beyond the sweep couplings.

Trenches shall be compacted to a minimum 95 percent of the maximum density as defined by AASHTO T99 or ASTM D 698 or ASTM D 2922 and D 3017, unless otherwise specified on the work order drawings or unless more stringent requirements prevail as dictated by local governmental agencies or other public regulatory agencies.

d. Compaction Methods:

1. See District Construction Standard No. 10.0010.

2. Inspection and Inventory of Buried Units:

Before backfilling, the contractor and District shall jointly inspect all trenches, conduit, cable placement, risers, pedestals transformer box pads and other construction not accessible after backfilling, and an inventory of units shall be taken. If corrections are required, a second inspection shall be made after completion of the changes.

8. Fiber Optic Duct.

a. Fiber conduit will conform to the previous conduit standard with the following exceptions:

1. Fiber conduit will be orange in color

2. Fiber feeders will be 2"

3. Fiber service drops will be 1"

TRENCH CONSTRUCTION, PVC CONDUIT

1. SCOPE:

This specification covers trenching, trenching location in reference to other utilities, conduit location within the trench, backfill and compaction of backfill.

2. STANDARDS:

This specification includes reference to the following "*The American Society for Testing and Materials International*" (ASTM International) standards.

2.1. Soil Compaction:
ASTM D 698.00a Standard Test Methods for Laboratory Compaction Characteristics of Soil Using Standard Effort 12,400 ft.-lb/ft cubed.

2.2 Soil Classifications for Backfill:
ASTM D 2487-00 Standard Practice for Classifications of Soils for Engineering Purposes. (Unified Soil Classification System)
ASTM D 2488-00 Standard Practice for Description and Identification of Soils (Visual-Manual Procedure)

3. TERMINOLOGY:

3.1. Trench: Excavation for placement of individual conduits or duct systems for electrical and/or communication services.

3.2. Backfill Area: Area of trench backfilled in three zones- 1) Foundation 2) Embedment 3) Final Backfill Zone.

3.2.1. Foundation: Used only where the trench bottom is unstable or a material that does not compact. Additional compacted material may be added to make a secure base.

3.2.2. Embedment: Compacted material placed below, around and above the conduit/duct system to provide support and protection for the conduit/duct system..

3.2.2.a. Bedding: Material placed on the trench bottom or on foundation to provide uniform support and protection for the conduit(s)

2.2.2.b.Conduit Zone: Material placed on either side of the conduit and/or between ducts. This material prevents lateral displacement of the conduit/duct due to live loads or water infiltration.

3.2.2.c.Spring Line Cover: Six inches of material placed above the top of the

conduit/duct system. This material provides protection for the conduit duct system from final backfill and/or live loads imposed on the trench.

3.2.3. Final Backfill: Trench area that extends from the top of the 6 inch cover to the top of the trench. Material here is native soil, unless the material contains cobbles or boulders over 4 inches in diameter.

3.3. Spring Line: The top of a single conduit or highest duct in the trench with more than one conduit.

3.4. PVC Conduit: Polyvinylchloride (PVC) conduit used for single conduit runs or duct systems. PVC conduit for electric systems will be grey. PVC conduit for fiber optic system shall be orange.

3.5. Definitions: This standard includes the definitions in ASTM 2487 and 2488, Section 3 "Terminology."

4. BACKFILL MATERIALS:

General: All backfill materials are defined in ASTM 2487 & 2488, Section 3 'Terminology.' All backfill used in any trench shall be organic-free material. This includes organic particles and larger organic debris.

4.1. Foundation Materials:
This material shall be compactible material such as gravel, sand, silt or clay or a mixture of those materials. Nothing larger than 1 inch minus gravel/aggregate shall be used. See ASTM 2487 & 2488, Section 3 "Terminology," 3.1.2 "Gravel" (subsection "fine")

4.2. Embedment Zone Materials:
Material in all three areas, bedding, conduit zone and cover, shall be sand, silt or clay material. Material shall pass a number 40 sieve but does not have to pass a number 200 sieve. Clay or Silt materials are defined as *fine grained top soil or soil free of any gravel, rock or rock chips.* See ASTM 2487 & 2488, Section 3 "Terminology," 3.1.1 "Clay" & 3.1.7 "Silt."
Sand is defined as *fine particles of rock, common reference "blow sand"*. See ASTM 2487 & 2488, Section 3 "Terminology," 3.1.6 "Sand" (subsection "fine")

4.3. Final Backfill Zone Materials
This material can in most cases be native soil/rock excavated from the trench. However if this material contains cobble/boulders larger than 4 inches in diameter it shall not be used.

5. CONSTRUCTION LOCATION/DIMENSIONS:

5.1. Location: The trench shall be within the easement granted to the District. The trench shall not be closer to other utilities than described below.

5.1.1 Water Facilities: The electric facilities shall be a minimum of 18 inches radially from any water line. This measurement is from surface to surface, not center to center.

5.1.2 Gas Facilities: The electric facilities shall be a minimum of 10 feet radially from any gas transmission line and 18 inches radially from any gas service line. This measurement is from surface to surface, not center to center.

5.1.3 Sewer Facilities: Where the sewer facilities are at or above the electric line elevation the radial separation shall be a minimum of 24 inches. If the sewer facilities are at a lower elevation than the electric line the trench shall be a minimum of 36 inches radially from the sewer line trench. These measurements are from surface to surface, not center to center.

5.1.4 Communication Facilities: Communication facilities, other than the District's fiber optic cable, shall be a minimum of 12 inches radially from the any electric facility. This measurement is from surface to surface, not center to center.

5.2. Width:

The minimum width of an electrical trench shall be 24 inches for a single conduit up to 4 inches in diameter. (See Figure # 1 in Section 7 under 7.1 Cross Section Dimension on page 5 of 6.} Trenches for conduit larger than 4 inches in diameter or with more than one conduit shall be determined by the conduit(s) placement in the trench. Minimum trench width shall be 5 times the diameter of a single conduit or 24 inches. (Which ever is larger).

5.3. Depth:

The minimum depth of an electrical service trench, for primary or secondary power or fiber optic cable, shall be 36 inches. This depth shall be measured from the top of the conduit (Conduit Spring Line). The trench must be deep enough to place the foundation (if required) and bedding so the entire diameter of the conduit is below minimum grade. (Exceptions to this must have prior District approval and be installed as shown in this Standard. See Figure # 2 in Section 7 under 7.2 Concrete Encased Conduit on page 6 of 6.)

5.4 Backfill:

5.4.1 Foundation: Foundation where required shall be a minimum of 2 inches of compacted material. Foundation backfill does not need to be continuous provided compaction & cable protection is achieved.

5.4.2 Bedding: Bedding shall be a minimum of 2 inches continuous compacted material and shall be constructed so the conduit is in contact with bedding at all times.

5.4.3 Conduit Zone: Conduit zone depth shall be determined by the diameter of the conduit. The conduit zone shall be from the bedding to the spring line of the conduit and shall consist of material compacted along each side of the conduit. The material shall be

installed so there are no voids along the bottom sides of the conduit. Filling these voids shall be accomplished by shovel slicing, water compaction or other standard method.

5.4.4. Six Inch Cover: Cover zone shall be a minimum of 6 inches of compacted material.

5.4.5. Final Back Fill Zone: The final back fill zone shall restore the trenched area to the original contours with compacted native or barrow fill.

6. COMPACTION:

6.1. General Compaction:

All trench materials shall be compacted to 95% compaction. Compaction can be achieved by water, vibration or mechanical means. All material shall be compacted in 6 inch layers or as per ASTM D 698.

See ASTM D 698 for full requirements.

6.2. Zone Required Compaction:

6.2.1. Trench Bottom/Foundation: The trench base shall be compacted if excavated with a back hoe. All rake ridges shall be compacted or removed to undisturbed soil. If full or partial foundation is required it shall be added in minimal lifts and compacted to 95% compaction.

6.2.2. Bedding: The compacted (95%) two inches of bedding shall form a smooth pipe bed for uniform support of the conduit.

6.2.3. Conduit Zone: The compaction of the conduit zone shall be done in a manner that shall not damage or compress the conduit. Compaction shall be a minimum of 95%, as required.

6.2.4. Six Inch Cover: The conduit cover zone shall be in one lift and compacted to 6 inches @ 95% compaction.

6.2.5. Final Backfill: Final backfill requirements shall be determined by the material used and the land use over the trenched area. Compaction shall be a minimum of 95% with lifts that shall not exceed 8 inches regardless of the material employed as backfill.

6.2.5.1. Landscaped Areas: Any landscaped area shall be restored with acceptable top soil or native fill.

6.2.5.2. Parking Lot/Street: Any material and compaction under lots and/or streets shall be determined by the governing agency/owner.

6.2.5.3. Sidewalks/Curbs/Retaining Walls: Native fill shall be replaced with either 5/8 or 3/4 inch minus material that is compacted to full density.

7. DRAWINGS/DIAGRAMS/ILLUSTRATIONS

Figure #1 below is a typical trench layout cross sectional view showing the various zones and minimum reguired dimensions.

Figure #2 on page 6 of 6 is a cross section view of a concrete encased conduit. This method of reduced clearances is acceptable only with approval of District Staff.

7.1 Figure # 1 Cross Section Dimension:

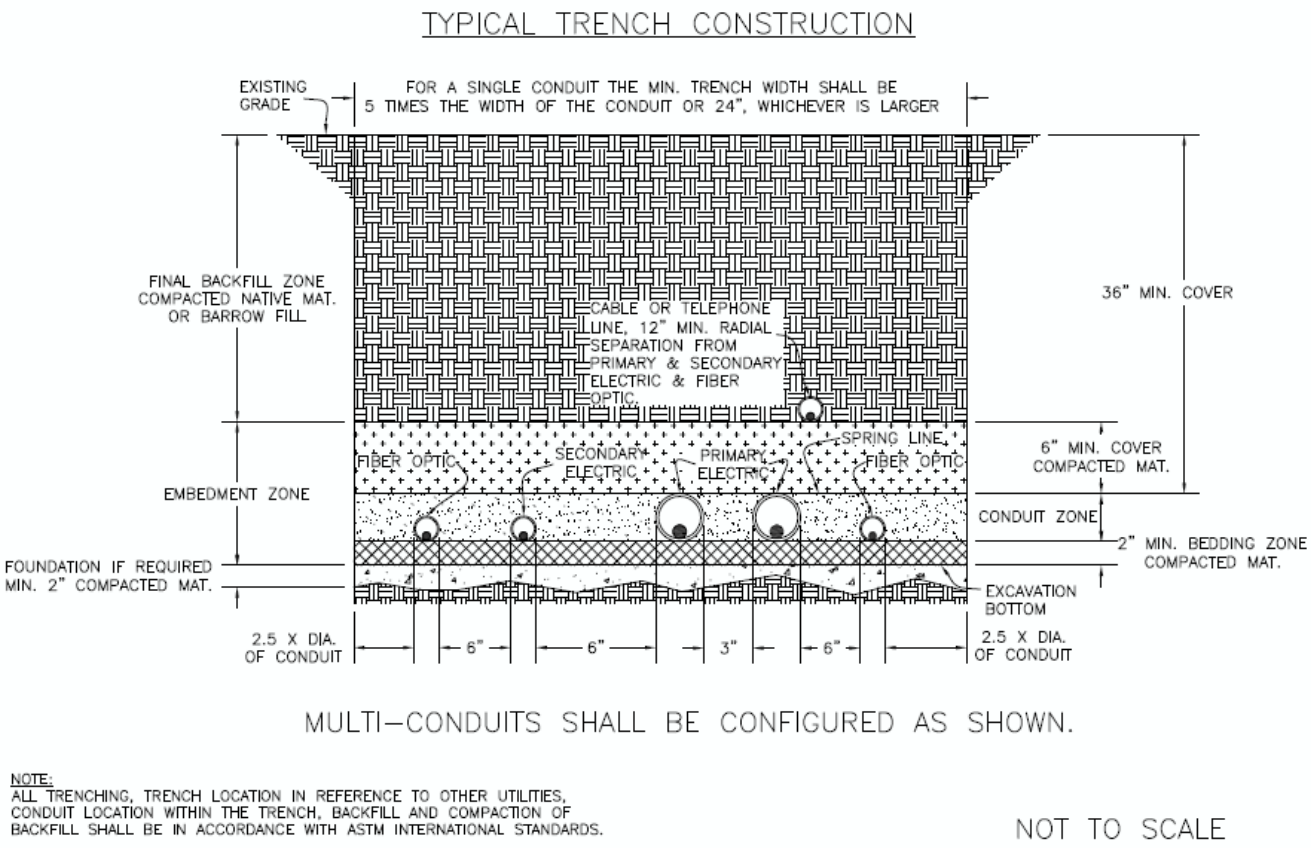

NOTE:
ALL TRENCHING, TRENCH LOCATION IN REFERENCE TO OTHER UTILITIES, CONDUIT LOCATION WITHIN THE TRENCH, BACKFILL AND COMPACTION OF BACKFILL SHALL BE IN ACCORDANCE WITH ASTM INTERNATIONAL STANDARDS.

NOT TO SCALE

TRENCH CONSTRUCTION, PVC CONDUIT

7.2 Figure #2 Concrete Encased Conduit

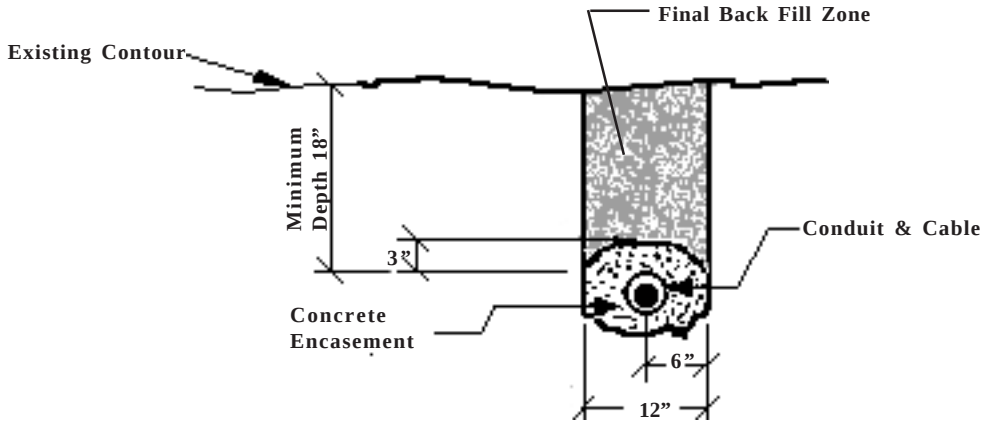

Notes:

1. Conduit shall rest on either concrete or suitable foundation.
2. Concrete encasement shall be a 4 sack cement mix.

Section Number 10.1130

CONCRETE TRANSFORMER BOX PAD INSTALLATION

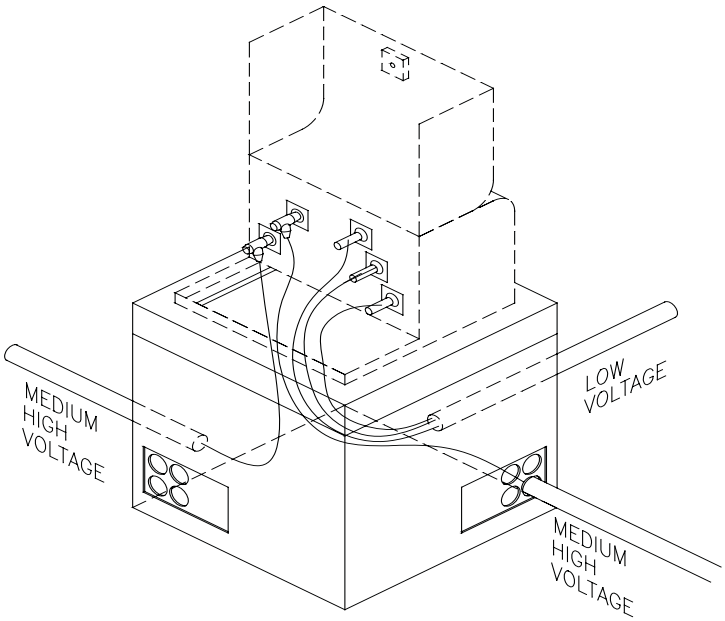

Figure 1. Concrete Transformer Vault (typical installation):

- All disturbed soil beneath the transformer vault shall be compacted.
- The bottom of the transformer box pad excavation shall be set level utilizing final grade.
- Backfilling shall not be performed until inspected and approved by Grant County PUD to ensure installation requirements have been met. Grounds, if necessary, shall be installed before backfill.
- Conduit, vault, and duct system shall not be displaced during backfilling and compaction.
- Conduit entering transformer box pads shall be supported in their proper position during backfill and compaction.
- The conduit for medium high voltage cable shall be positioned as indicated in the figures to allow for the incoming and outgoing conductor to coil around the inside of the vault in the same direction. Conduit for low voltage should be positioned to avoid cable pulling conflicts with the high voltage conductor and bushings.
- Developer shall be responsible for the replacement of any disturbed property corner pins. Property corner pins shall not extend more than 18 inches below final grade.
- Conduit shall be terminated as specified in the District's Conduit Specifications.
- Minimum clearance requirements and terrain limitations surrounding the transformer vault site should be 8 feet in front of the transformer and 3½ feet to the sides and back .

Section Number 10.1130

CONCRETE TRANSFORMER BOX PAD INSTALLATION

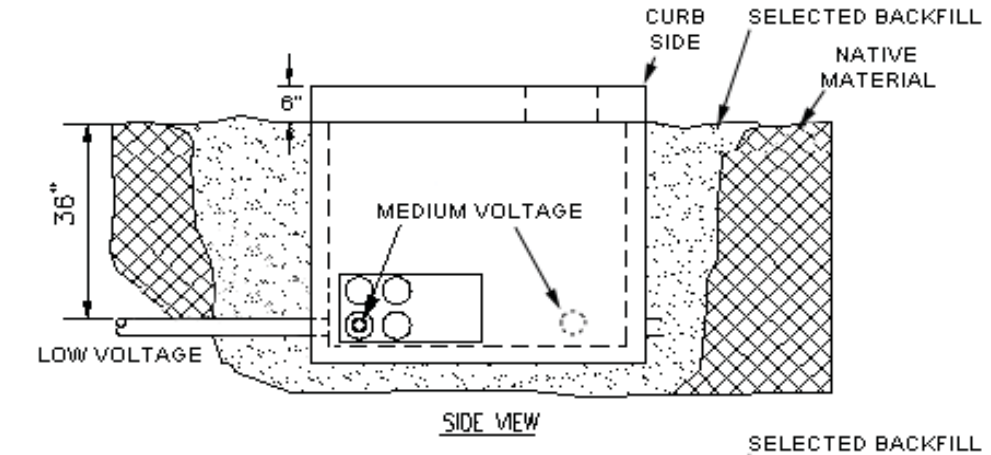

SIDE VIEW

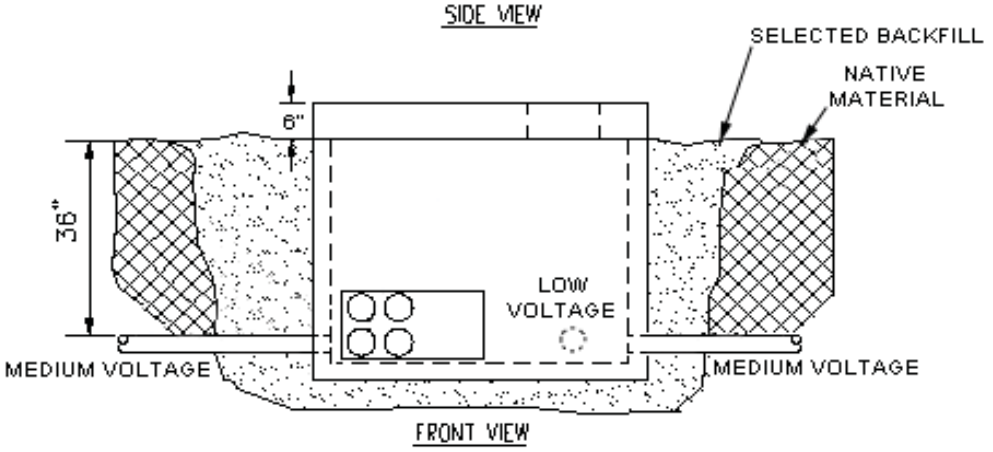

FRONT VIEW

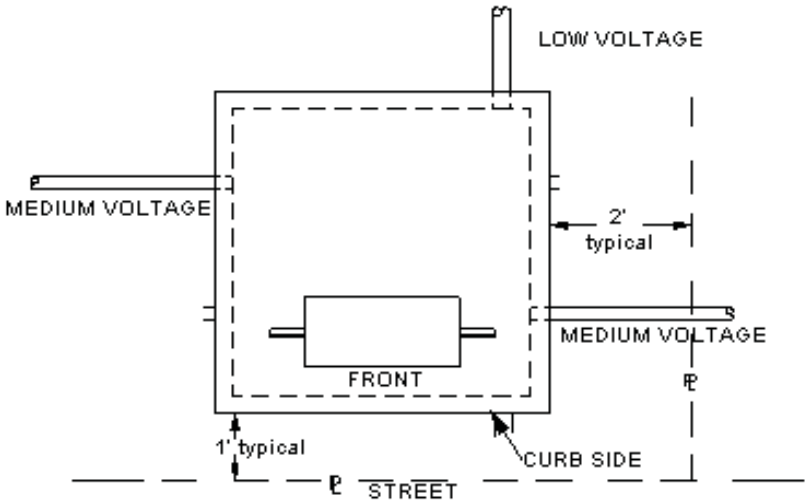

PLAN VIEW

PUBLIC UTILITY DISTRICT NO. 2 OF GRANT COUNTY, WASHINGTON				
CONSTRUCTION STANDARDS				
STANDARDS COMMITTEE APPROVAL DATE:	05/24/01	Title: CONCRETE TRANSFORMER BOX PAD INSTALLATION		10.1130
DESIGNER:	AJW			
STANDARDS ENGR:	E WENKE	LAST REV.	04/23/09	Page 2 of 2

Section Number 10.1140

SECONDARY PEDESTAL INSTALLATION

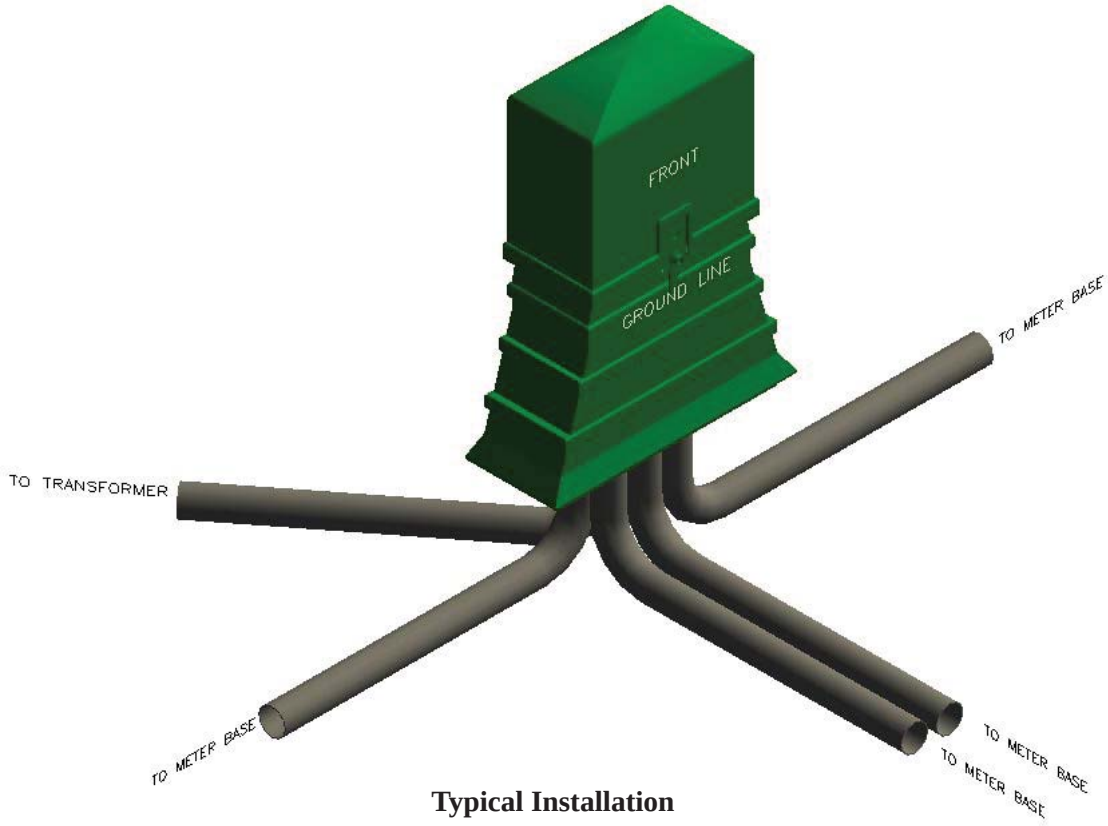

Typical Installation

- All disturbed soil beneath the secondary pedestal shall be compacted.
- The bottom of the secondary pedestal shall be set level utilizing final grade.
- Backfilling shall not be performed until inspected and approved by Grant County PUD to ensure installation requirements have been met.
- Conduit , vault, and duct system shall not be displaced during backfilling and compaction.
- Conduit sweeps into secondary pedestals shall be supported in their proper position during backfill and compaction.
- Developer shall be responsible for the replacement of any disturbed property corner pins. Property corner pins shall not extend more than 18 inches below final grade.
- Conduit shall be terminated as specified in the District's Conduit Specifications.
- Minimum clearance requirements and terrain limitations surrounding the secondary pedestal site should be 8 feet in front of the transformer and 3.5 feet to the sides and back .
- Low voltage distribution cable/conduits system identification shall be installed.

Section Number 19.0010

CONDUCTOR CLEARANCES FROM BUILDINGS (NOT ATTACHED)

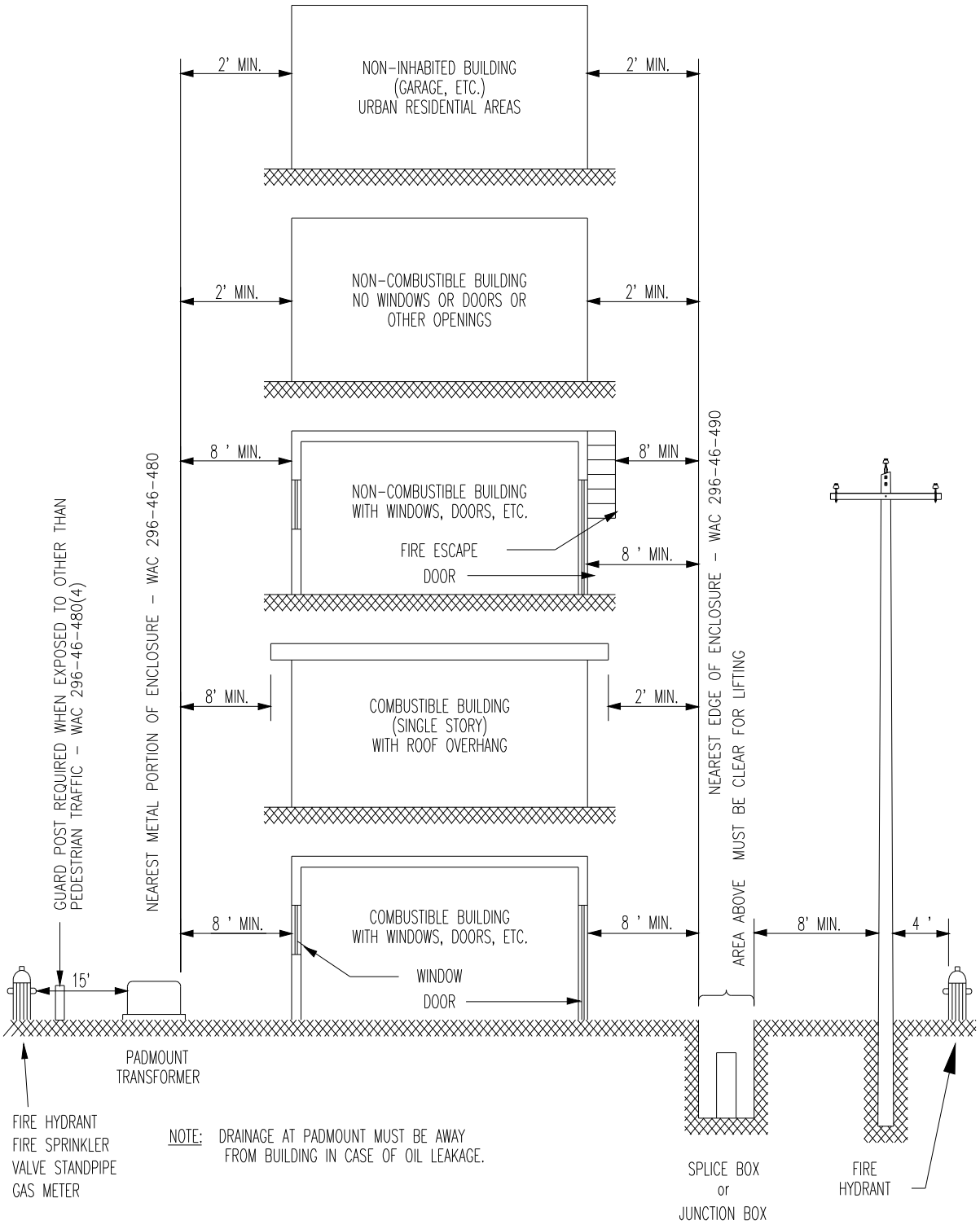

PUBLIC UTILITY DISTRICT NO. 2 OF GRANT, COUNTY WASHINGTON

CONSTRUCTION STANDARDS

STANDARDS COMMITTEE APPROVAL DATE:	**1/27/97**	**Title: CONDUCTOR CLEARANCES FROM BUILDINGS (NOT ATTACHED)**		**19.0010**
DESIGNER:	**AJW**			
STANDARDS ENGR:	**x/x/xx**	LAST REV.	**8/21/01**	

Section Number 19.0010

CONDUCTOR CLEARANCES FROM BUILDINGS (NOT ATTACHED)

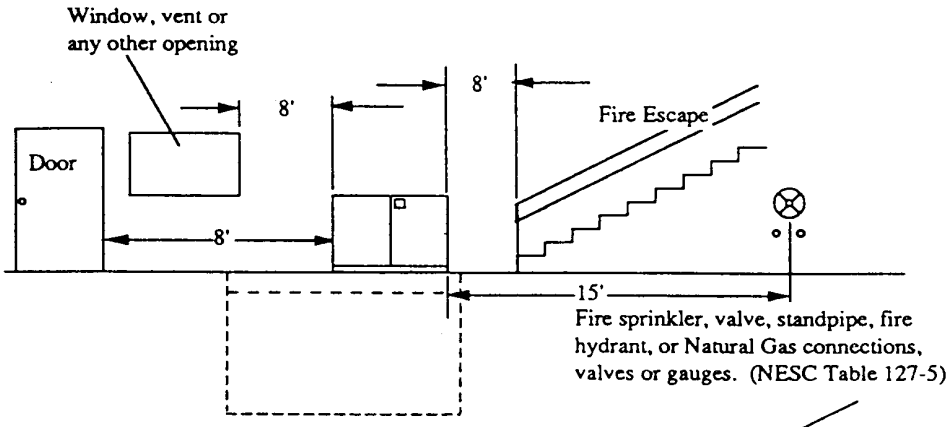

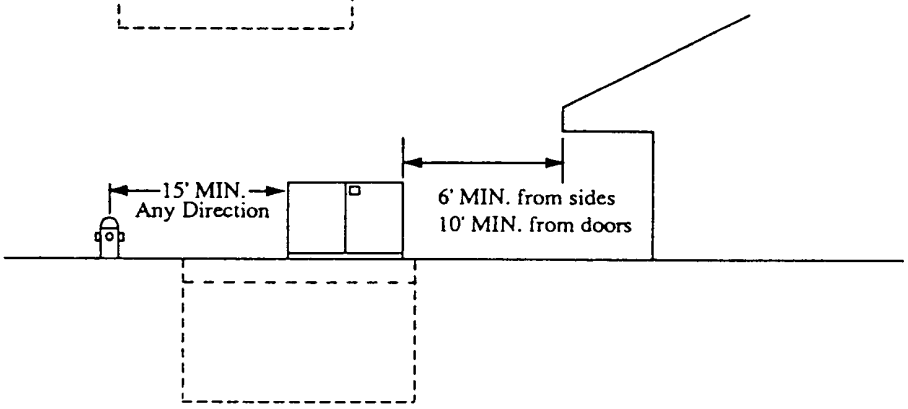

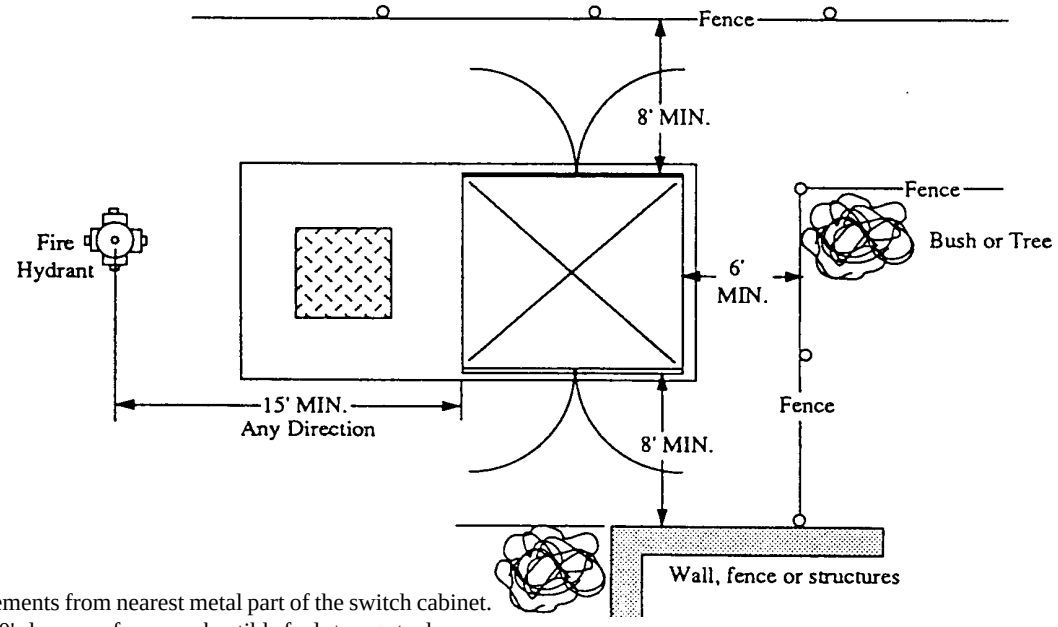

NOTES:

1. All measurements from nearest metal part of the switch cabinet.
2. Minimum 20' clearance from combustible fuel storage tanks.
3. Padmount equipment shall be not more than 15' from access road or driveway.
4. Landscaping which does not interfere with operation and maintenance of the switch cabinet is allowed.

PUBLIC UTILITY DISTRICT NO. 2 OF GRANT, COUNTY WASHINGTON				
CONSTRUCTION STANDARDS				
STANDARDS COMMITTEE APPROVAL DATE:	1/27/97	Title: CONDUCTOR CLEARANCES FROM BUILDINGS (NOT ATTACHED)		19.0010
DESIGNER:	AJW			
STANDARDS ENGR:	x/x/xx	LAST REV.	8/21/01	Page 4 of 6

ASSEMBLY UNITS

COMMON GCPUD ASSEMBLY UNITS

ITEM#	STOCK#	DESCRIPTION
A01C1E		1/0 AL EPR 15KV, 1 PHASE
A01C3E		1/0 AL EPR 15KV, 3 PHASE
A08C3E		1100 AL EPR 15KV, 3 PHASE
A10C		600V UG SNGL #6 AL
A36C		600V UG TRIPLEX AL, 2 - 350 & 1 - 4/0
J085		CONDUIT, SCH 40, FIBER OPTIC (ORANGE), 2”
J088		TRACER WIRE, #12 THHN ORG
J230		FIBER VAULT
JT32		CONDUIT, SCH 40 ELBOW 2” 90 DEG
JU78		FIBER HANDHOLE
L20		LIGHT 200W HPS 120V W/PC
LA12		12 FT STEEL MAST ARM, STREET LIGHT
LDB30		LIGHT DIRECT BURIED, STEEL STANDARD, 30 FT
LDB40		LIGHT DIRECT BURIED, STEEL STANDARD, 40 FT
LF1		LIGHT FUSE, BREAK-AWAY SINGLE
LV*	22097799	ENCLOSURE, LIGHTING JUNCTION BOX
LW		WIRE, CONDUIT, & ACCESORIES FOR LDB30-40, LPED30-40
T22*	76010720	CONDUIT, SCH 40 PVC, 2”
T13*	76010730	CONDUIT, SCH 40 PVC, 3”
T14*	76010740	CONDUIT, SCH 40 PVC, 4”
T16*	76010760	CONDUIT, SCH 40 PVC, 6”
T32*	76050320	CONDUIT, SCH 40 PVC ELBOW DB 2" X 36”R, 90 DEG
T32A*	76050318	CONDUIT, SCH 40 PVC ELBOW DB 2" X 24”R, 90 DEG
T33*	76050330	CONDUIT, SCH 40 PVC ELBOW DB 3" X 36”R, 90 DEG
T33A*	76050328	CONDUIT, SCH 40 PVC ELBOW DB 3" X 24”R, 90 DEG
T34*	76050340	CONDUIT, SCH 40 PVC ELBOW DB 4" X 36”R, 90 DEG
T42*	76060340	CONDUIT, SCH 40 PVC SWEEP DB 4" X 36”R, 45 DEG
T92*	76054020	CONDUIT, FIBERGLASS ELBOW 2" X 36"R - 90 DEG
T93*	76054030	CONDUIT, FIBERGLASS ELBOW 3" X 36"R - 90 DEG
T94*	76054040	CONDUIT, FIBERGLASS ELBOW 4" X 36"R - 90 DEG
T96*	76054060	CONDUIT, FIBERGLASS ELBOW 6" X 36"R - 90 DEG
T80*	83762700	SEALANT, INSTA-FOAM, 1 CU. FT. KIT

T82*	76670020	BELL END, 2" PVC
T83*	76670030	BELL END, 3" PVC
T84*	76670040	BELL END, 4" PVC
T86*	76670060	BELL END, 6" PVC
U46V*	22022374	VAULT, TRANSFORMER, 1 PHASE, 15-167KVA, 4'8" SQ. X 3'6"
AND	22412478	COVER, TRANSFORMER, 1 PHASE, 15-167KVA, 4'8" SQ. X 3'6"
U47V*	22022374	VAULT, TRANSFORMER, 3 PHASE, 45-500KVA, 4’8” SQ. X 3’6”
AND	22402486	COVER, TRANSFORMER, 3 PHASE, 45-500KVA, 4’8” SQ. X 3’6”
U54V*	22022374	VAULT, CONCRETE, SWITCHING, 1 PHASE, 4’8” SQ., 4’
AND	22152378	COVER, VAULT, SWITCHING, 1 PHASE, 4’8” SQ., 4’
U55V*	22022462	VAULT, CONCRETE, SWITCHING, 3 PHASE, 4'8" X 4'8" X 4'
U56SG*	22022092	VAULT, CONCRETE, SWITCHGEAR, 9’ X 5’ X 7’2”
U56V*	22023083	VAULT, CONCRETE, SWITCHING, 3 PHASE, 9’ X 5” X 7’2”
U59		JUNCTION BUS, 4 POS
U69		CAP, PROTECTIVE GRONDED
U79*	44402439	PEDESTAL, SECONDARY - ABOVE GROUND
U84TEP		CONNECTOR, ELBOW, 1/0 AL EPR, 15KV LOADBREAK W/TEST POINT
UFIV03		FAULT INDICATOR UG TPR 300A 1P
UA1*	81040700	MARKER, UNDERGROUND INSTALLATIONS
UA9*	83271800	GUARD POST

* Customer responsibility to provide

SEE GRANT COUNTY P.U.D. PARTS CATALOG FOR ITEMS NOT LISTED ABOVE. /

STOCK PAGES

SEALANT, INSTA-FOAM KIT

Cone Nozzle
(sold separately)

GENERAL: Two-component, quick cure polyurethane foam to fill cavities, holes, and cracks.

SPECIFICATIONS: The kit shall include pressurized “A” and “B” cylinders, dispensing gun and hose assembly, and extra nozzles. The A cylinder shall contain polymeric isocyanate and the B cylinder shall contain a polyol blend. The foam shall expand immediately upon chemical reaction of A component and B component, to a final volume that is 3 to 5 times the dispensed volume. The foam shall cure to a semi-rigid form and be tack-free in about 1 minute, cuttable in about 5 minutes and fully cured in approximately 1 hour.

The nozzles shall fit the Froth-Pak 12 Insta-flo run. The nozzles shall be a cone type with a medium flow output. The nozzles shall be identified by a white base and clear body.

PURCHASING: UOM: Each

STOCK NUMBER	DESCRIPTION	YIELD (approx.)	APPROVED MANUFACTURERS & CATALOG NUMBERS
			DOW CHEMICAL
83762700	FOAM	1 cu. ft.	**FROTH-PAK 12**
83762800	FOAM	17 cu. ft.	**FROTH-PAK 200**
83763000	NOZZLES	25 pk.	**259211**

Rev. 09-05-13 DH “Removed Fomo Handi-Foam as approved.”
Rev. 02-24-12 DH “Added Fomo Products as approved; Changed Flexible Products to Dow Chemical; updated catalog numbers.”
Rev. 10-18-02 EEA “Deleted Duo Fill 400.”
Rev. 11-03-00 LW “Changed catalog number for 8376300.”

PUBLIC UTILITY DISTRICT #2 OF GRANT COUNTY	Date	05/18/87	SEALANT, INSTA-FOAM KIT	ASSEMBLY UNIT		Yes	
	Rev #	7					
	Designer	LJ		TDSI X	TTNI	TMNI	TSNI
	Standards Engineer Al Silva			**83762700**			

MARKERS, UNDERGROUND INSTALLATIONS

Mid-Range Marker
Approx. 8-1/4"
#81040700

Full Range Marker
Approx. 15"
#81040800

GENERAL: Markers for use of identifying any of the following: service drops, buried junctions, buried transformers, conduit stubs, road crossings, repair points, and snow covered installations.

SPECIFICATIONS: Red Polyethylene cover over nontoxic environmentally safe solution for self leveling of filament. 40 year life required. Red is the required electric marker color. Broadcast band width is 169.8 kH

MAX. DEPTH: 81040700 - 6 ft.
81040800 - 6 ft.

INSTALLATION: Shall not be buried greater than specified depth.
The marker should be at least 6 inches above buried object - flat and level.
Cover the marker with 4 inches of soil before back fill work is done.
*To be used with Scotchmark II Electronic Marker Locator.

STOCK NUMBER	APPROVED MANUFACTURERS & CATALOG NUMBER	
	3M ScotchMark	
81040700	1256	
81040800	1251	

Rev. 05-31-01 MHS "Added electric specifications including band width."
Rev. 07-29-96 LL - Adding reference to electronic Marker Locator.

PUBLIC UTILITY DISTRICT NO. 2 OF GRANT, COUNTY WASHINGTON

MARKERS, UNDERGROUND INSTALLATION

DATE:	03/16/88	STOCK CATALOG	☒ TDSI ☐ TINI ☐ TMNI ☐ TSNI	81040700
DESIGNER;	LL			
STANDARDS ENGR;	A. Silva			Page 1 of 1

Q:\Datat\Standards\Stkcat\81040700.pmd

POST CONC 9" DIA. 72" LONG

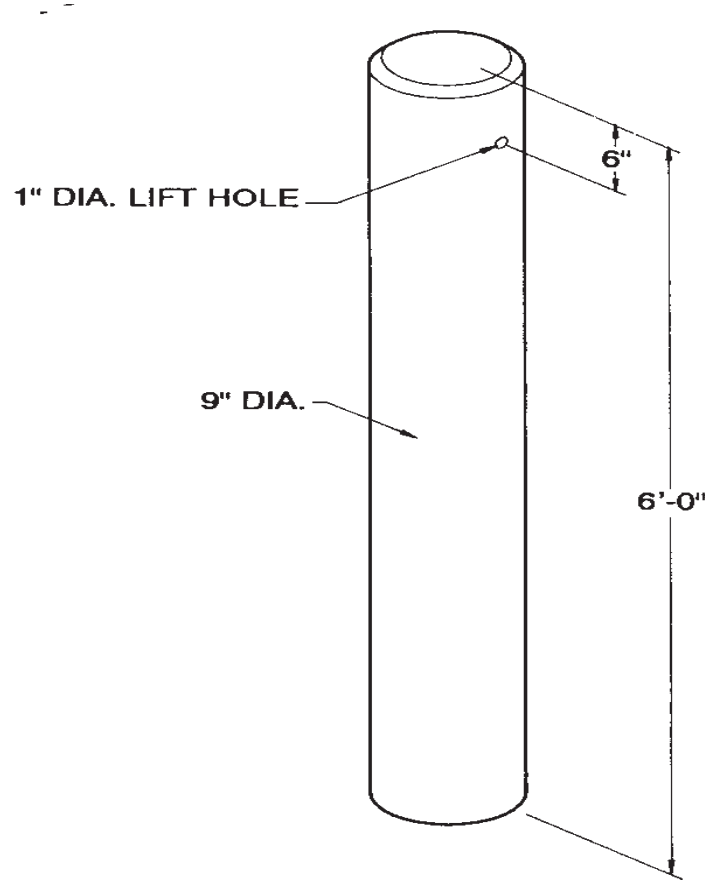

Guard Post
398 lbs.

STOCK NUMBER	APPROVED MANUFACTURERS & CATALOG NUMBER
	UTILITY VAULT COMPANY
83271800	GUARD POST

Rev. 02-05-92 MG - Added drawing. Changed size from 8" dia. 64" long to 9" dia. 72" long. Added Utility Vault Co. and deleted Columbia Concrete and Spokane Concrete.
Rev. 04-22-85 KB - Added Spokane Concrete Products.

PUBLIC UTILITY DISTRICT NO. 2 OF GRANT, COUNTY WASHINGTON				
POST CONC. 9" DIA. 72" LONG				
DATE:	07/11/77	STOCK CATALOG	[X] TDSI [ ] TINI [ ] TMNI [ ] TSNI	83271800
DESIGNER;	A.S			
STANDARDS ENGR;	A. SILVA			Page 1 of 1

Q:\Datat\Standards\Stkcat\83271800.p65

BELL, END
PVC Fitting

Bell End Photo

GENERAL: Bell ends designed to create a smooth end for PVC conduit in vaults, risers or other end of run areas. Used to protect cable insulation from abrading or other damage.

SPECIFICATIONS: Bell ends shall be made from PVC {Polyvinylchoride} with inert modifiers to improve weatherability. All fittings shall conform to NEMA TC-3 and UL 514. Only bell ends form molded to have round smooth shoulders will be accepted.
Each end must have an insert collar with molded stop.

SIZE: See Table for sizes

PURCHASING: Standard Pkg is listed for Can-Tex. Order like numbers from other manufacturers.

STOCK NUMBER	SIZE	Std. Pkg.	APPROVED MANUFACTURERS & CATALOG NUMBER			
			Can-Tex	Kraloy	Carlon	RaceTec
76670010	1"	50	5144005	MEB10	E997F-CAR	End Bells*
76670020	2"	40	5144008	MEB20	E997J-CAR	End Bells*
76670030	3"	50	5144010	MEB30	E997L-CAR	End Bells*
76670040	4"	50	5144012	MEB40	E997N	End Bells*
76670060	6"	15	5144014	MEB60	E997R	End Bells*

*** Race Tec orders must list size and quanity.**

Rev. 10-22-02 EA "Added 1" size changed page # to lowest stock number, deleted Certainteed"
Rev. 09-15-95 LL "Added 2-1/2""

PUBLIC UTILITY DISTRICT NO. 2 OF GRANT, COUNTY WASHINGTON

BELL, END

DATE:	06/19/90	STOCK CATALOG	[X] TDSI [ ] TTNI [ ] TMNI [ ] TSNI	76670010
DESIGNER;	GW			
STANDARDS ENGR;	AL SILVA			Page 1 of 1

Q:\Datat\Standards\Stkcat\76670010.pmd

ADAPTER, PVC TO THREADED METALLIC, FEMALE

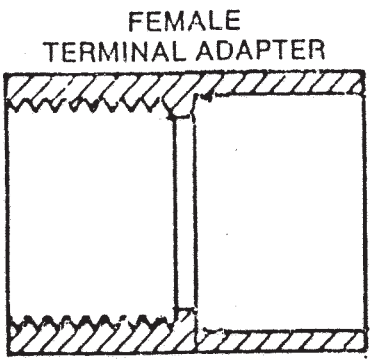

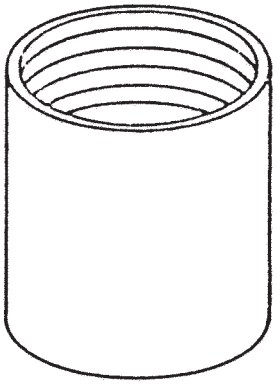

GENERAL: Socket type female terminal for rigid and DB PVC ducting. Fittings must conform to ANSI/NEMA Specification TC 3, "PVC Fittings for use with Rigid PVC Conduit and Tubing".

SIZE: As noted below.

PURCHASING: Quantity Each.

STOCK NUMBER	SIZE (IN)	APPROVED MANUFACTURERS & CATALOG NUMBER				
		CARLON	CERTAINTEED	KRALOY	CAN-TEX	RACETEC
76320007	3/4	E 942 E	59631	FA07	5140044	FEMALE ADAPTER*
76320010	1	E 942 F	59632	FA10	5140045	FEMALE ADAPTER*
76320015	1-1/2	E 942 H	59634	FA15	5140047	FEMALE ADAPTER*
76320020	2	E 942 J	59635	FA20	5140048	FEMALE ADAPTER*
76320025	2-1/2	E 942 K		FA25	5140049	FEMALE ADAPTER*
76320030	3	E 942 L	59637	FA30	5140050	FEMALE ADAPTER*
76320040	4	E 942 N	59639	FA40	5140052	FEMALE ADAPTER*
76320050	5	E 942 P	59640	FA50	5140053	FEMALE ADAPTER*
76320060	6	E 942 R	59641	FA60	5140054	FEMALE ADAPTER*

Rev. 09-15-95 L.L. "Added 2-1/2"
Rev. 08/13/92 J.H. "Added RaceTec and catalog numbers."

PUBLIC UTILITY DISTRICT NO. 2 OF GRANT, COUNTY WASHINGTON

ADAPTER, PVC TO THREADED METALIC, FEMALE

DATE:	**07/10/89**	**STOCK CATALOG**	☒ TDSI ☐ TINI ☐ TMNI ☐ TSNI	**76320007**
DESIGNER;	**HC**			
STANDARDS ENGR;	A. Silva			**Page 1 of 1**

Q:\Datat\Standards\Stkcat\76320007.pmd

ELBOW, FIBERGLASS SWEEP 90 DEGREE

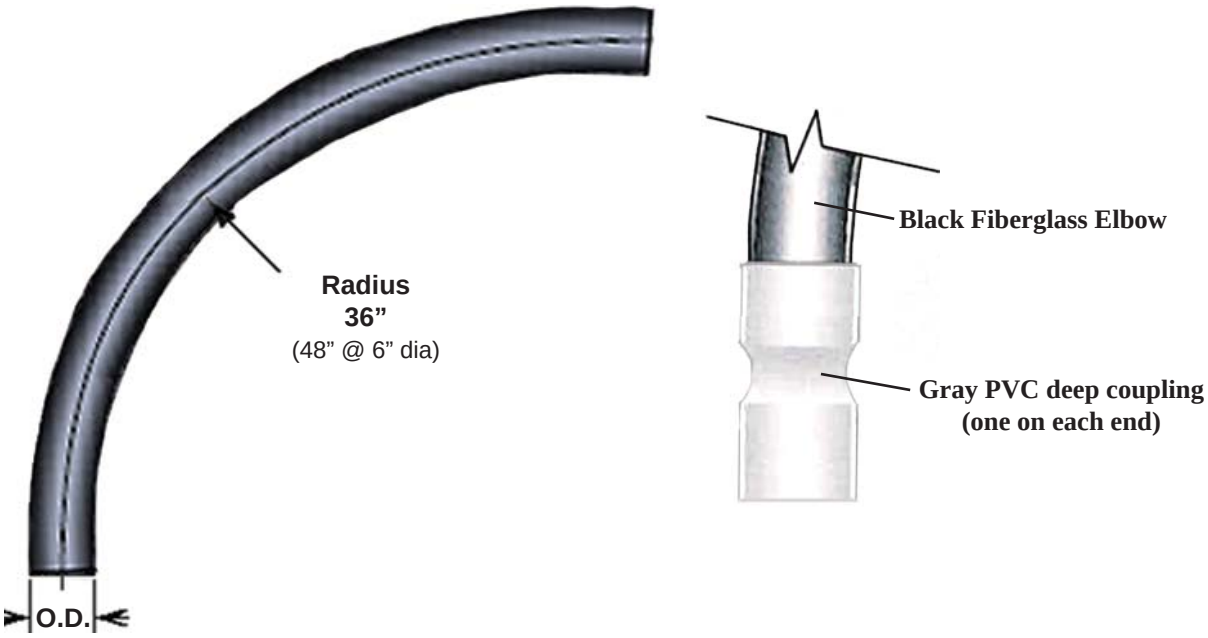

GENERAL: 90 degree fiberglass elbows in rigid nonmetallic conduit configurations for underground sweeps in distribution and transmission applications.

SPECIFICATIONS: Elbows shall be formed from Champion Fiberglass™ reinforced epoxy resin conduit, manufactured using the single filament wound system, with a radius of 90° ± 1°. Glass shall be E-type and the glass content shall be 70% ± 5% as per API SPEC 15 LR. The resin shall be epoxy without fillers. Elbows shall be IPS above ground type and be fire resistance per UL 1684 and CSA-C22, No. 211.3. Elbow shall be usable for below ground as well as above ground. Each elbow shall be equipped with two (2) permanently attached deep PVC couplings.

RATINGS:

Tensile Strength (Axial)	11,000 psi	ASTM D2105
Compressive Strength (Axial)	12,000 psi	ASTM D695
Barcol Hardness	54 ± 2	ASTM D2583

PURCHASING: Quantity “Each”

STOCK NUMBER	SIZE (inches)	WALL TYPE	O.D. (inches)	IMPACT VALUE (lb per ft)	STIFFNESS VALUE (32°-74° F)	APPROVED MANUFACTURERS & CATALOG NUMBERS	
						CHAMPION	RACEWAY TECH
76054020	2	STANDARD	2.14	40	320	**20C-SW-92-2D**	**FG-029036RW**
76054030	3	STANDARD	3.14	70	140	**30C-SW-92-2D**	**FG-039036RW**
76054040	4	HEAVY	4.19	120	130	**40C-HW-92-2D**	**FG-049036RW**
76054060	6	HEAVY	6.60	200	65	**60C-HW-93-2D**	**FG-069048RW**

Rev. 12-31-15 SW “Added Raceway Technologies as approved mfg”
Rev. 11-02-10 DH “Changed catalog numbers and specification to Above Ground type for fire resistivity.”
Rev. 04-09-10 MHS “Removed United Fiberglass/Raceway as approved mfg.”
Rev. 05-18-07 DH “Added United Fiberglass/Raceway as approved mfg.; added O.D.”

PUBLIC UTILITY DISTRICT #2 OF GRANT COUNTY	Date	12/19/02	ELBOW, FIBERGLASS SWEEP 90 DEGREE	ASSEMBLY UNIT	Yes		
	Rev #	6					
	Designer	MHS		TDSI X	TTNI	TMNI	TSNI
	Standards Engineer E. WENKE			**76054020**			

ELBOW, SCHEDULE 40 PVC, 90 DEGREE

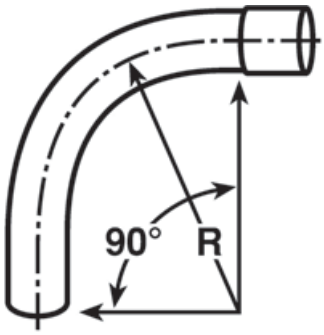

GENERAL: Schedule 40 PVC belled end 90 degree elbow for overhead or underground installations.

SPECIFICATIONS: The elbow shall be made from PVC resin in accordance with NEMA TC-2 and UL 651. The elbow shall have one integral bell end with the minimum depth required per UL 651 as shown below.

PURCHASING: UOM: Each

STOCK NUMBER	SIZE	RADIUS (R) inches	UL 651 Min. BELL DEPTH (inches)	APPROVED MANUFACTURERS & CATALOG NUMBERS				
				CANTEX	CARLON	PRIME	JM EAGLE	RIDGELINE
76050307	¾	4½	23/32	**5233824**	**UA9AEB**	**UA9AEB**	**75900075**	**F4007590**
76050309	1	18	7/8	**----**	**UA9CFB**	**UA9CFB**	**7590180100**	**F401009018**
76050310		5¾		**5233825**	**UA9AFB**	**UA9AFB**	**75900100**	**F4001090**
76050316	2	18	1⅛	**5233846**	**UA9CJB**	**UA9CJB**	**7590180200**	**F402009018**
76050318		24		**5133924**	**UA9DJB**	**UA9DJB**	**7590240200**	**F402009024**
76050320		36		**5233848**	**UA9FJB**	**UA9FJB**	**7590360200**	**F402009036**
76050327	3	18	1 19/32	**5233850**	**UA9CLB**	**UA9CLB**	**7590180300**	**F403009018**
76050328		24		**5233837**	**UA9DLB**	**UA9DLB**	**7590240300**	**F403009024**
76050330		36		**5233930**	**UA9FLB**	**UA9FLB**	**7590360300**	**F403009036**
76050340	4	36	1¾	**5233842**	**UA9FNB**	**UA9FNB**	**7590360400**	**F404009036**
76050360	6	48	2⅛	**5233816**	**UA9HRB**	**UA9HRB**	**7590480600**	**F406009048**

Rev. 04-12-11 DH "Deleted 1½ , 2½ , and 5" dia; Changed PW Pipe to JM Eagle; Added Prime and Ridgeline."
Rev. 03-13-02 AL "Changed from Plain End to Belled End; Changed Mfg. catalog numbers; reformatted page."
Rev. 01-15-01 MHS "Removed changed some 18" radius to 24" changed Cat. #'s to new and removed some vendors."
Rev. 12-15-89 GW "First Edition."

PUBLIC UTILITY DISTRICT #2 OF GRANT COUNTY	Date	12/15/89	ELBOW, SCHEDULE 40 PVC, 90 DEGREE	ASSEMBLY UNIT: Yes
	Rev #	4		
	Designer	GW		TDSI X / TTNI / TMNI / TSNI
	Standards Engineer: Al Silva			**76050307**

CONDUIT, HEAVY WALL RIGID PVC SCHEDULE 40

GENERAL: Rigid schedule 40 PVC (polyvinyl chloride) conduit acceptable for all underground, encased and above-ground applications.

SPECIFICATIONS: The conduit shall be made of heavy wall schedule 40 PVC that is sunlight and impact resistant. The PVC pipe shall meet or exceed the following standards and tests: NEMA standard TC-2 except for bell dimensions, ASTM Test Method D 1598 for Dimensional Requirements, and ASTM D-1785 & /ASTM D-2672 for Joint Specifications. Each section shall have one socket bell end. The socket bell end shall be minimum length as stated per item. Manufacture name, schedule 40, plant identification and date of manufacture shall be stamped or printed on each stick. These marks shall be legible and permanent.

PURCHASING: UOM: Feet
Order 10' foot sections with one socket bell end of appropriate length only. Solid wall only.
Include stock page with each purchase request and bid contract.

STOCK NUMBER	CONDUIT SIZE	Dimensions (inches) Min.			# of 10ft sticks per Bundle or Crate	Socket Bell Min. Length (inch)	Feet per Bundle or Crate	APPROVED MANUFACTURERS & CATALOG NUMBERS			
		O.D.	I.D.	Thickness				PRIME	JM EAGLE	CANTEX	RIDGELINE
76010707	¾	1.05	0.824	0.113	10	1.75	100	**49007-010**	**.75 S40 UL LB**	**A52AG12**	**4007510**
76010710	1	1.315	1.049	0.113	10	2.00	100	**49008-010**	**1 S40 UL LB**	**A52BA12**	**4010010**
76010720	2	2.375	2.067	0.154	140	3.00	1,400	**49011-010**	**2 S40 UL LB**	**A52CA12**	**4020010**
76010730	3	3.5	3.068	0.216	88	3.75	880	**49013-010**	**3 S40 UL LB**	**A52DA12**	**4030010**
76010740	4	4.5	4.026	0.237	57	4.50	570	**49015-010**	**4 S40 UL LB**	**A52EA12**	**4040010**
76010760	6	6.625	6.065	0.280	26	6.125	260	**49017-010**	**6 S40 UL LB**	**A52GA12**	**4060010**

Rev. 03-09-11 DH "Deleted 1 1/2" conduit."
Rev. 07-28-10 DH "Changed Carlon to Prime and PW Eagle to JM Eagle; Updated JM Eagle catalog numbers."
Rev. 07-15-10 DH "Corrected UOM listed; Updated Carlon and PW Eagle catalog numbers;
Rev. 06-18-09 MHS "Converted Page, Deleted foam core specifications; added Ridgline; changed Cat #s"

PUBLIC UTILITY DISTRICT #2 OF GRANT COUNTY	Date	01-24-94	CONDUIT, HEAVY WALL RIGID PVC SCHEDULE 40	ASSEMBLY UNIT: Yes
	Rev #	9		
	Designer	HC		TDSI X / TTNI / TMNI / TSNI
	Standards Engineer: AL SILVA			**76010707**

CONDUIT, FIBER OPTIC, SCHEDULE 40

GENERAL: Heavy wall rigid PVC Schedule 40 conduit for installation of fiber optic cables.

SPECIFICATIONS: The conduit shall be PVC (polyvinyl chloride) that is a orange color through the entire depth of material. The orange color shall be sunlight resist per UL requirements. The conduit shall be manufactured with one integral solvent-well bell end per length. The conduit shall comply with NEMA TC-2, UL-651, ASTM Test Method D 1598, dimensional requirements of ASTM D-1785 and the joint specifications of ASTM D 2672-96a.

PURCHASING: Quantity “feet”. Conduit shall be purchased in 10’ lengths.

STOCK NUMBER	SIZE (INCHES)	Average O.D (INCHES)	Approx. I.D (INCHES)	Min. WALL THICKNESS (INCHES)	APPROVED MANUFACTURERS & CATALOG NUMBERS		
					ROYAL PIPE	JM EAGLE	RIDGELINE
76010310	1	1.315	1.033	0.133	**1464675**	**1S40ULORGP**	**4210010**
76010320	2	2.375	2.049	0.154	**1464683**	**2S40ULORGP**	**4220010**

Rev. 11-18-09 DH “Removed “comm’ only” print spec; Updated cat. numbers; Changed PW Pipe to JM Eagle; Added Ridgeline.”
Rev. 09-27-02 EA “Added 1” size; changed page number.”
Rev. 08-07-02 APL “Changed CED to Royal Pipe.”
Rev. 03-14-02 MHS “Added warning print ‘For communication cable only

PUBLIC UTILITY DISTRICT #2 OF GRANT COUNTY	Date	08/12/00	CONDUIT, FIBER OPTIC, SCHEDULE 40	ASSEMBLY UNIT	Yes
	Rev #	6		SUBSTITUTIONS	Approval Required
	Designer	MHS		TDSI X / TTNI / TMNI / TSNI	
	Standards Engineer			**76010310**	

BUS, JUNCTION, LOADBREAK, 15 kV, 200 AMP

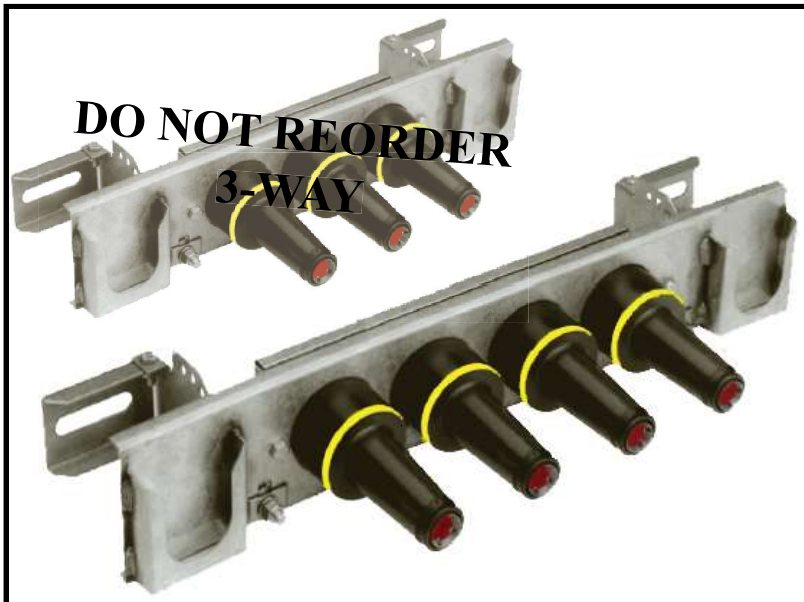

GENERAL: 200 Amp loadbreak junction complete with grounding nuts and variable-tilt mounting angle stainless steel bracket.

SPECIFICATIONS: The Junction shall meet all requirements of IEEE Standard 386-*Separable Insulated Connector Systems*. The bracket shall have a parking stand on each side of the bushing arrangement. The frontplate and parking stand shall be made of 16 gauge grade 302 or 304 stainless steel. The loadbreak junction shall have a solid current path of copper alloy with no aluminum components. The junction bushings shall have a fault activated piston that is forced forward by gas pressure during fault closing. The junction shall have a 13 gauge grade 302 or 304 stainless steel bracket that is adjustable up to 90° tilt in 10° increments. The bracket shall be factory assembled onto the junction in an outer position on a 45° angle from horizontal. The junction shall have two ½" threaded hex nuts, referred to as grounding nuts, welded on the underside of the base plate to accommodate a T-bolt ground lug connector (not included). The following items shall be included in kit form with each junction: shipping caps/dust shield, silicone Lubricant, and installation instructions.

RATINGS:

Max. Operations & Time:	10 at 10,000 amps symmetrical for 0.17 seconds		
Phase to Phase Max:	14.4 kV	Phase to Ground Max:	8.3 kV
60 Hertz (1 min.):	34 kV rms	BIL	95 kV

PURCHASING: UOM: Each

STOCK NUMBER	BUSHINGS	LENGTH	APPROVED MANUFACTURERS & CATALOG NUMBERS	
			COOPER	ABB (ELASTIMOLD)
66940003	3	19.6"	**DO NOT REORDER**	
66940005	4	22.9"	**LJ215C4B-0036**	**---**
66940007	5	27"	**---**	**J5-22222-15-TMA**

Rev. 12-17-19 RP "Added 5 position bus; Elastimold is only approved vendor for the 5 position bus"
Rev. 06-10-14 DH "Removed Hubbell as approved; Updated photo."
Rev. 02-03-12 DH "Removed Elastimold as approved; Updated Cooper catalog number; Labeled 3-way as DO NOT REORDER."
Rev. 08-14-09 DH "Added Hubbell as approved; Updated Cooper catalog number to add ground nut."

PUBLIC UTILITY DISTRICT #2 OF GRANT COUNTY	Date	12/15/76	BUS, JUNCTION, LOADBREAK, 15 kV, 200 AMP	ASSEMBLY UNIT	Yes		
	Rev #	9					
	Designer	GH		TDSI X	TTNI	TMNI	TSNI
	Standards Engineer A. SILVA			**66940003**			

200 AMP PROTECTIVE CAP, 15kV

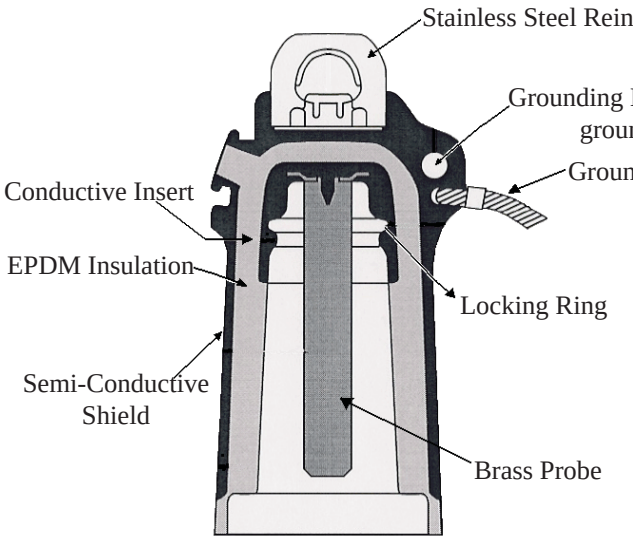

CUT A-WAY VIEW OF CAP

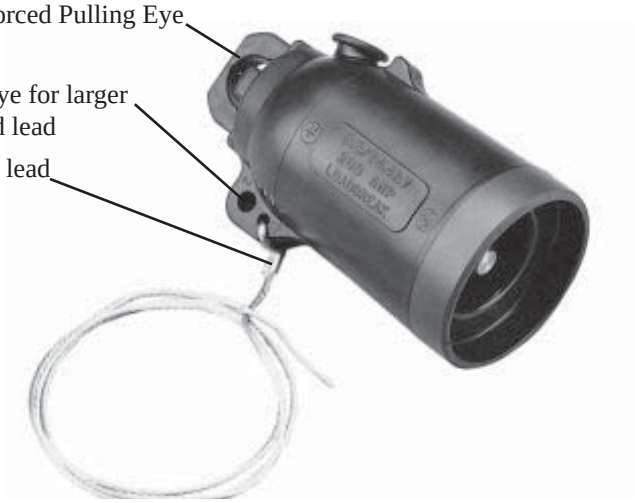

GENERAL: 200 amp protective cap for installation on 15kV load break bushings.

SPECIFICATIONS: Cap shall meet or exceed the requirements of ANSI/IEEE Standard 386. Cap shall be constructed to mechanically seal loadbreak bushing interfaces. Unit shall have brass probe with concentric locking ring, bedded in a conductive insert, EPDM insulation with a semi-conductive shield, in compliance with ANSI/IEEE Standard 592, a stainless steel reinforced pulling eye, grounding eye and a minimum 36" 14 AWG braided lead for grounding to avoid low energy discharge.

RATING: 200 amp.

RATING TABLE (kV)			
PHASE TO PHASE MAX	PHASE TO GROUND MAX	60 Hz 1 MINUTE WITHSTAND	BIL
14.4	8.3	34	95

PURCHASING: The following items shall be included in kit form with each Cap:
Protective strap with stranded copper ground wire
Silicone Lubricant
Installation Instruction sheet

STOCK NUMBER	VOLTAGE CLASS	APPROVED MANUFACTURERS & CATALOG NUMBERS		
		COOPER	ELASTIMOLD	HUBBELL
66945044	15	**LPC215**	**160DRG**	**215ICI**

Rev. 05-02-06 DH "Updated 'Hubbell' catalog number; converted page in InDesign."
Rev. 07-08-04 MRS "Updated page format; added 'T&B/Elastimold' and Hubbel/Chardon."
Rev. 07-26-00 MHS."Removed Blackburn, changed names and catalog numbers"
Rev. 01-25-97 L.L. "Added Chardon and removed Joslyn as approved."

PUBLIC UTILITY DISTRICT #2 OF GRANT COUNTY	Date	03/15/91	200 AMP PROTECTIVE CAP, 15kV	ASSEMBLY UNIT	Yes		
	Rev #	5 +		SOLE SOURCE	No		
	Designer	MHS		TDSI X	TTNI	TMNI	TSNI
	Standards Engineer E. WENKE			**66945044**			

CONNECTOR, LOADBREAK, ELBOW, 15kV, 200A, TEST POINT

Cooper Power Systems "elbow" with Test Point and Cap.

Elastimold "elbow" with Test Point & Cap.

GENERAL: 200 amp loadbreak elbow connector for underground cable connection to apparatus.

SPECIFICATIONS: Load break separable connector shall meet or exceed the requirements of ANSI/IEEE Standard 386 for *Separable Insulator Connection Systems.* Load break separable connectors shall be fully shielded and submersible. Units shall be molded from EPDM rubber and have semi-conducting insert and shield.
Load break separable connectors shall include a capacitive test point on the molded body with snap-on cap. Each elbow connector kit shall include the elbow, a copper-top compression connector, probe installation tool, loadbreak probe, silicone lubricant, and instructions.

RATINGS:

BIL	95	Corona Level Min.	11 kV
60 Hz 1 min withstand		34	
Phase to Ground Max.		8.3 kV	
Phase to Phase Max.		14.4 kV	
Operational Ratings		Operations at 10,000 symmetrical amps	10
Short circuit Ratings		At 10,000 symmetrical amps	0.17 Sec.

PURCHASING: UOM: Each Standard Packaging: 20/pk
Each elbow kit shall be packaged and shipped in a sealed plastic bag.

STOCK NUMBER	Conductor Size	Conductor	APPROVED MANUFACTURERS & CATALOG NUMBERS	
			Cooper Power Systems	Elastimold
66930352	#2	Stranded Aluminum Full Neutral	**LE215AB04T**	**166LR-B-5220**
66930452	1/0		**LE215CC06T**	**166LR-B-5240**
66930652	4/0		**LE215DD09T**	**166LR-C-5270**

Rev. 10-02-13 DH "Changed Cooper catalog on 1/0 & 4/0 to increase cable range."
Rev. 02-28-13 DH "Updated Cooper catalog number for bulk packaging."
Rev. 03-19-10 MHS "Updated Cooper Cat #,s formatted as standard, change specifications for separable connectors."
Rev. 09-08-04 DH "Updated photo on Page 2 of 2, reworded rating table."

PUBLIC UTILITY DISTRICT #2 OF GRANT COUNTY	Date	05/02/95	CONNECTOR, LOADBREAK, ELBOW, 15kV, 200A, TEST POINT	ASSEMBLY UNIT	Yes		
	Rev #	8					
	Designer	LL		TDSI X	TTNI	TMNI	TSNI
	Standards Engineer A SILVA			**66930352**			

CONNECTOR, LOADBREAK, ELBOW, 15kV, 200A, TEST POINT

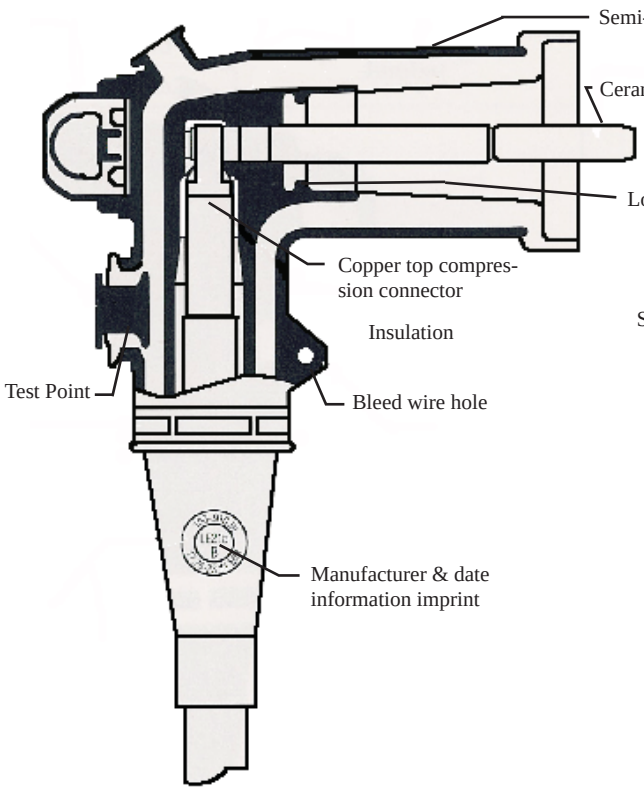

Cooper Power System
Cutaway Drawing

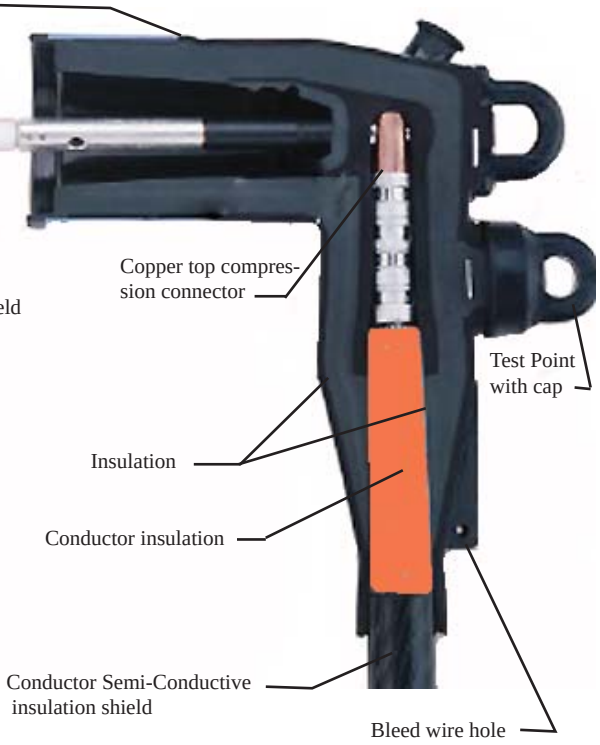

Elastimold Cutaway Model.

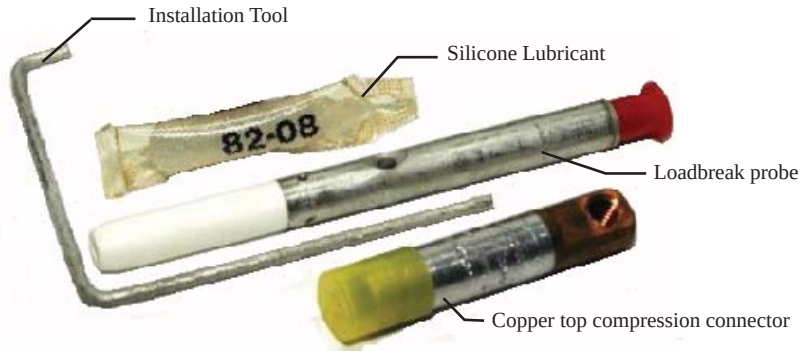

Kit to be included with each elbow.

PUBLIC UTILITY DISTRICT #2 OF GRANT COUNTY	Date	05/02/95	CONNECTOR, LOADBREAK, ELBOW, 15kV, 200A, TEST POINT	ASSEMBLY UNIT	Yes		
	Rev #	8					
	Designer	LL		TDSI X	TTNI	TMNI	TSNI
	Standards Engineer A SILVA			66930352			

POLES, STREET LIGHT, STEEL, DIRECT BURIAL

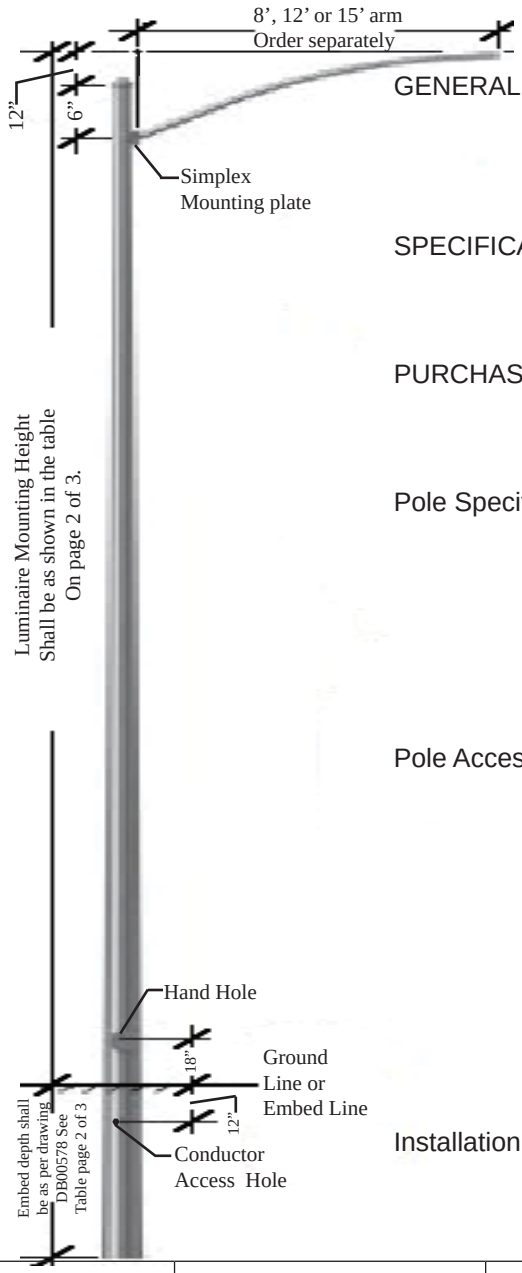

GENERAL: Embedded steel street light pole with tri-bolt simplex luminaire arm mounting system. To be ordered without arms. Arms shall be ordered as follows: Stock Page # 49001108 for all arms in 8', 12' and 15' lengths.

SPECIFICATIONS: Poles shall be manufactured in accordance with drawing #DB00578 from Valmont and noted on this stock page. See drawing for EMBEDDED POLES.

PURCHASING: Order each Pole only on this stock page. **Each order is to be verified by Blankenship and Associates. Include stock page with order.**

Pole Specifications: Pole shaft and simplex mounting brackets shall be Grade A steel as per ASTM A 595.
Pole body shall be constructed of 11 gauge steel with a 0.11 nominal thickness in a single piece.
Pole shall be constructed of one piece rolled steel with a full longitudinal high frequency electric resistance seam weld.
Pole body shall have a uniform taper from base to top of 0.14 inches per foot.

Pole Accessories: Each pole shall have the following accessories included:
1. Design criteria see page 3 of 3.
2. Pole Simplex mounting base. (Detail on page 3 of 3)
3. Reinforced handhole with cover. Cover shall be included with the pole, and have a ground screw inside the pole next to the handhole. (Detail on page 2 of 3)
4. Pole cap assembled on pole at the factory. (Detail on page 2 of 3)
5. 1 - $^{5}/_{8}$" Conductor access hole 12" below the ground line.
6 & 7. Finish requirements on page 3 of 3.

Installation: Poles shall be embedded as shown in the pole dimension table on page 2 of 3.

STOCK NUMBER	Item Description	District Height Designation	APPROVED MANUFACTURERS & CATALOG NUMBERS
			Valmont
49001130	Embedded Steel Pole	30'	**EM 32-870A 336 OS GV HH AH**
49001140		40'	**EM 32-E00B460 OS GV HH AH**

Catalog number is as follows EM 32 = Pole type. Next 4 Digits = Base Dia. Next 3 digits = height (336 = 33 feet 6 inches) OS = without arms. GV = galvanized finish. HH = Handhole. AH = 1 - 5/8" Conductor access hole..

Rev. 07-24-12 MHS "Changed specifications and accessories list."
Rev. 02-20-02 AS "Added AH note to Valmont Catalog number."
Rev. 08-29-00 MHS "Changed stock page/stock # and added item 49007140."
Rev. 08-22-00 AS "Change in Valmont Cat. #."

PUBLIC UTILITY DISTRICT #2 OF GRANT COUNTY	Date	06/13/00	POLES, STREET LIGHT, STEEL, DIRECT BURIAL	ASSEMBLY UNIT	Yes		
	Rev #	5					
	Designer	MHS		TDSI X	TTNI	TMNI	TSNI
	Standards Engineer E WENKE			**49001130**			

POLES, STREET LIGHT, STEEL, DIRECT BURIAL

Pole dimension table.

STOCK NUMBER	Pole Base OD (inches)	Pole Top OD (inches)	Pole Length (feet & inches)	Pole Embed Depth (feet & inches)	Pole OD @ Grade (inches)
49001130	8.7	4.01	**33’ 6”**	**5’ 6”**	**7.93**
49001140	11	4.56	**46**	**6’ 6”**	**10.09**

Luminaire Mounting Dimensions.

STOCK NUMBER	Arm Length (feet)	Arm Rise above Simplex (inches)	Simplex Height (feet & inches	Luminaire Height (feet & inches)
49001130	8	22	**27’ 6”**	**29’ 4”**
	12	30		**30’ 0”**
	15	36		**30’ 6”**
49001140	8	22	**39’ 0”**	**40’ 10”**
	12	30		**41’ 6”**
	15	36		**42’ 0”**

Items below are on drawing #DB00578 Details See Detail # 3 for POLE TOP CAP, #5 for HANDHOLE . See Detail RADIAL INDEX-EMBEDDED POLES on the drawing.

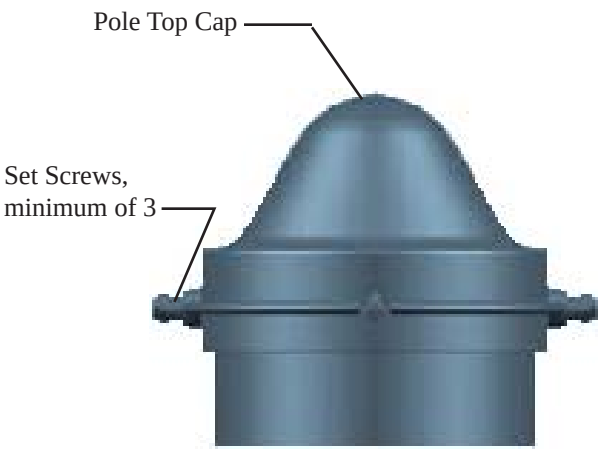

Cap Detail

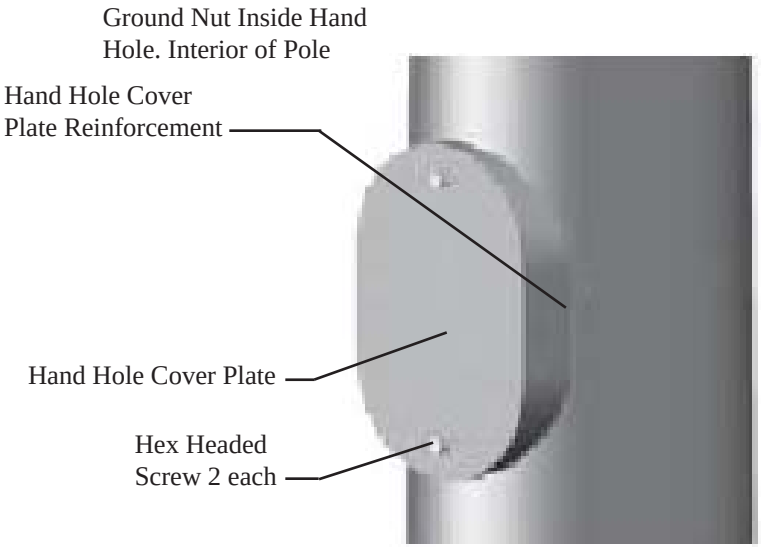

Hand Hole Detail

PUBLIC UTILITY DISTRICT #2 OF GRANT COUNTY	Date	06/13/00	POLES, STREET LIGHT, STEEL, DIRECT BURIAL	ASSEMBLY UNIT	Yes		
	Rev #	5					
	Designer	MHS		TDSI X	TTNI	TMNI	TSNI
	Standards Engineer E WENKE			**49001130**			

POLES, STREET LIGHT, STEEL, DIRECT BURIAL

Specifications continued from page 1 of 3:

DESIGN CRITERIA: These specifications shall produce a standard pole that shall withstand dead loading factors of the arm and luminaire and theoretical dynamic loads imposed by 100 mile per hour winds with a 1.3 gust factor on the pole fully assembled and installed with 15 foot arms with luminaires with a minimum of 0.5 ice loads.

A. Height correction factors and drag coefficients shall be applied to the entire structure with appropriated safety factors.
B. Poles shall be manufactured in accordance with Drawing # DB00578 from Valmont.

POLE SIMPLEX MOUNTING BASE: Base & base mounting bracket shall be hot rolled steel conforming to ASTM A 36. Both the base and the base bracket shall be full filet welded to the pole. The weld shall be cleaned, ground smooth prior to finishing the pole. (Detail #4 Drawing DB00578)
The Simplex base shall have 3 (three) drilled and tapped holes for 3/4" bolts. These holes shall be free of debris finish or tap residues. Note: Bolts shall be included with the arms not the poles.

REINFORCED HANDHOLE: Each pole shall have a 4" X 6.5" handhole cut as shown and centered 1' 6" above the ground line. Handhole shall be 90º clockwise to the luminaire arm/s. This hand hole shall be reinforced with 11 gauge steel welded to the pole and the weld shall be clean, ground and brushed prior to finish. Each pole shall be equipped with an 11 gauge steel handhole cover that mounts with two hex head bolts, one at the top of the hand hole and one at the bottom. Cover plate shall have sharp edges removed and have a galvanized finish. (Detail #5 Drawing DB00578)
A ground nut shall be welded inside the handhole. The nut shall be ½" 13 UNC hex nut with hex head bolt to ground the pole. (Detail #5 Drawing DB00578)

POLE CAP: Each pole shall be equipped with a removable cap as shown constructed of 11 gauge steel and galvanized finish. Cap shall be installed at the factory with a minimum of three set screws. (Detail #3 Drawing DB00578)

CONDUCTOR ACCESS: Each pole shall have a hole drilled 12" below the embed line.. The hole shall be 1-5/8" in diameter directly below the Hand Hole. (Detail RADIAL INDEX-EMBEDDED POLES Drawing DB00578)

FINISH CLEANING AND PRIMING: After cleaning (Sand blast where required to remove corrosion or scale) and removal of burs, slag, metal and nonmetallic foreign materials the formed and shaped pole is to be immersed in an agitated 4.5% to 6% concentrated caustic solution with a temperature range of 150º to 180º F. This procedure is to be followed by immersion in a sulfuric acid solution of not less than 10% or more than 12% concentration within a temperature range of 150º to 160º F. Deep rinse in a fully submerged fresh water bath. After completely drying, the poles shall be immersed in a concentrated zinc ammoniumchloride flux solution heated to 170º F. The acidity of the flux solution shall be between 4.5 and 5.0 pH.

GALVANIZED FINISH: The pole shall be finished with a hot-dip method as required by ASTM 123 (Fabricated Products). Hardware items will be finished with a hot-dip method as required by ASTM F2329. Both shall be by immersion in a molten bath of prime grade zinc maintained at a temperature range of 810º to 850º F. Restrict aluminum content of the bath to less than 0.01% and skim the surface prior to immersion and removal. If the finish is contaminated by slag or flux ash the pole shall be refinished by repeating the cleaning and priming steps prior to reemerging in the molten bath.

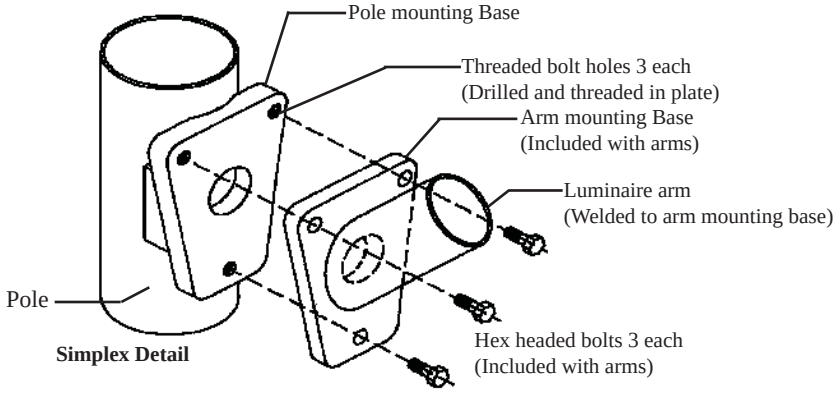

Simplex Detail

PUBLIC UTILITY DISTRICT #2 OF GRANT COUNTY	Date	06/13/00	POLES, STREET LIGHT, STEEL, DIRECT BURIAL	ASSEMBLY UNIT	Yes		
	Rev #	5					
	Designer	MHS		TDSI X	TTNI	TMNI	TSNI
	Standards Engineer E WENKE			49001130			

PEDESTAL, SECONDARY, ABOVE GROUND

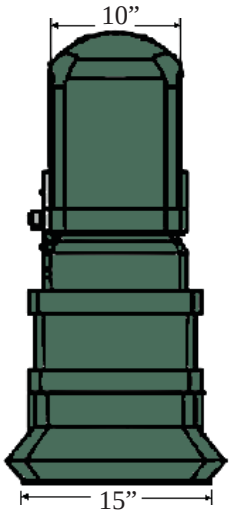

Side View

Front View with cover

Front View without cover

Enlarged view of 6-way 350 MCM Lay-in connector

GENERAL: Underground-fed enclosure pedestal with connectors for secondary connections from transformers.

SPECIFICATIONS: The pedestal shall be made with UV stabilized polyethylene. The pedestal shall have a flared base and step design to resist deflection when buried. The words “GROUND LINE” or “GRADE LINE” shall be molded into the front and back of the pedestal or molded on each side. The word “ELECTRIC” shall be molded into the top of the cover. The pedestal shall be provided with Penta bolt lock and provisions for ring lock for ANSI type double-locking system consisting of captive Penta head bolt recessed into blind hole. The 5-point Penta head bolt shall be 7/8”, point to flat, and fit a Snap-on socket head #B2191. All locking hardware shall be stainless steel.
Three 6-way 350 MCM lay-in connectors shall be installed in each pedestal. The connectors shall include clear lexan or plastic covers. The connectors shall be fabricated from 6061-T6 aluminum alloy and shall be compatible with both copper and aluminum conductor. All connectors shall conform to ANSI 119.4 Class A conductors.

LABELS: The warning/notice District supplied label shall be applied by the manufacturer prior to delivery. After award of the purchase order or contract, the District shall ship the required number of labels (stock Number 58080533) plus 10% extra. The manufacturer may request additional labels as needed at an extra charge.

PURCHASING: UOM: Each

STOCK NUMBER	COLOR	SUGG. BURIAL DEPTH	APPROVED MANUFACTURERS & CATALOG NUMBERS	
			COLUMBIA	NORDIC
44402439	MUNSEL GREEN	16”	**PF300C1G-MG188-GRANT**	**PSPF-101538-MG-L6350-GRANT**

Rev. 08-15-18 DH “Removed CMC/ESP as approved; added ‘Grant’ suffix for Columbia to designate the District warning label.”
Rev. 01-03-17 DH “Changed warning label to give 10 ft. clearance in front of pedestal.”
Rev. 03-11-09 DH “Updated Columbia cat. number; Corrected measurements in photo; Corrected referenced label stock number.”
Rev. 09-08-05 DH “Changed specs to ‘District supplying labels’; Added photo of decal to drawing.”

PUBLIC UTILITY DISTRICT #2 OF GRANT COUNTY	Date	08/14/96	PEDESTAL, SECONDARY, ABOVE GROUND	ASSEMBLY UNIT	Yes		
	Rev #	7					
	Designer	MHS		TDSI X	TTNI	TMNI	TSNI
	Standards Engineer E. WENKE			**44402439**			

COVER, 4’8” x 4’8”, 15 kVA - 167 kVA TRANSFORMER

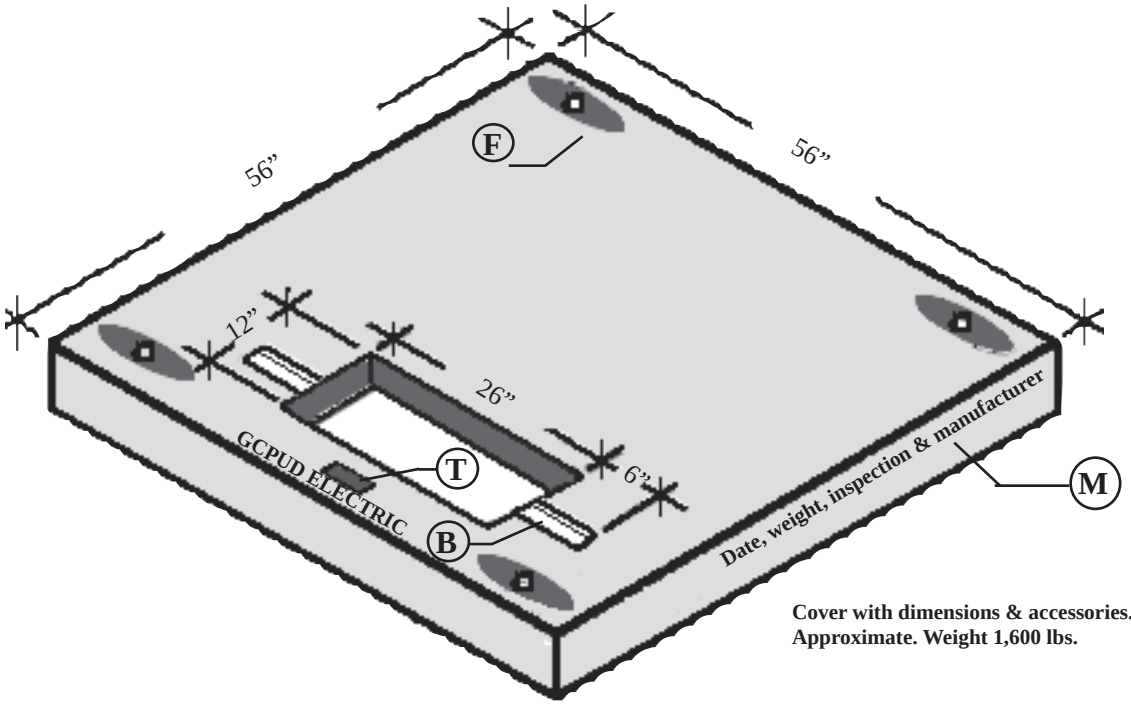

Cover with dimensions & accessories.
Approximate. Weight 1,600 lbs.

GENERAL: Cover for 1 phase (15 kVA - 167 kVA) pad mount transformer.

SPECIFICATIONS: Concrete cover shall be constructed per the Districts Precast Concrete Product Specification #03800: ***S:\DATA\STANDARD\Product Specifications/ 03800 Precast Concrete Products.*** The cover must support at least 3,000 lbs. The cover the words “GCPUD ELECTRIC” on the front as shown.

B. Galvanized C Channel 6” long 1-½ X 1-½ X 12” One (1) on each side of the slot. 2 each cover.

F. Burke’s Lifting Eye (4) in each corner on the cover. 8 each vault and cover. Size as required for lifting load.

M. Date,Weight and Inspection Stamp Paper or plastic tags shall not be accepted.

T. Vault Tag Impression - 5 1/2” X 2” Impression centered as shown. One each.

PURCHASING: **Include stock page with each purchase request or contract bid document.**
See stock page #22022374 for vault.

OFF-LOADING: Any units with pallets that are oversized, undersized, damaged, broken, have loose boards, or protruding nails or screws shall not be accepted.

STOCK NUMBER	AU	SIZE		APPROVED MANUFACTURERS & CATALOG NUMBERS	
		L	W	UTILITY VAULT COMPANY	H-2 PRECAST
22412478	**U46V**	4’ 8”	4’ 8”	**504 PAD SPECIAL**	**TPG550-1226**

Rev. 10-04-12 MHS “ Added item “T” Tag Impression Note, change title to “Cover”.”
Rev. 04-12-11 MHS “Updated Specifications and Page.”
Rev. 05-06-09 DH “Updated H2 catalog number; Added stock page and specifications inclusion note.”
Rev. 09-15-06 DH “Added Burke’s lifting eyes to specs; reformatted page in InDesign.”

PUBLIC UTILITY DISTRICT #2 OF GRANT COUNTY	Date	12/05/89	COVER, 4’8” x 4’8”, 15 kVA - 167 kVA TRANSFORMER	ASSEMBLY UNIT	Yes		
	Rev #	8					
	Designer	GW		TDSI X	TTNI	TMNI	TSNI
	Standards Engineer AL SILVA			**22412478**			

FAULT INDICATOR, UNDERGROUND, TEST POINT

GENERAL: Underground fault circuit indicator that attaches to test point on elbow or T-body.

SPECIFICATIONS: The test point fault indicator shall be encased in a thick, semiconductive EPDM rubber housing. The indicator shall have a rubber molded hook eye to be used for installation with a industry-standard hot stick. The fault indicator shall automatically rest when the power is restored after an outage. The indicator shall work with most elbow brands with a capacitive test point, especially Cooper and Elastimold.

PURCHASING: UOM: Each

STOCK NUMBER	AMPS	TRIP AMPS	MAX. FAULT CURRENT	TRIP RESPONSE	APPROVED MANUFACTURERS & CATALOG NUMBERS
					SEL SCHWEITZER ENG. LAB.
23151130	200	400	25 kA	1 ms	**1TPRI0400IR**
23151180	600	800			**1TPRI0800IR**

Rev. 09-20-19 DH “Corrected typo of catalog number.”
Rev. 07-20-18 DH “Removed Cooper; updated SEL catalog number.”
Rev. 02-01-05 MHS “Deleted 23151140, 1150, 1170 & 1190; Changed specifications and photos.”
Rev. 06-03-98 MB “Deleted RTE Cooper product no; Changed RTE Cooper catalog number.”

PUBLIC UTILITY DISTRICT #2 OF GRANT COUNTY	Date	09/10/87	FAULT INDICATOR, UNDERGROUND, TEST POINT	ASSEMBLY UNIT	YES
	Rev #	7			UFIV03 & UFIV10
	Designer	LL		TDSI X / TTNI / TMNI / TSNI	
	Standards Engineer: Al Silva			**23151130**	

ENCLOSURE, LIGHTING JUNCTION BOX

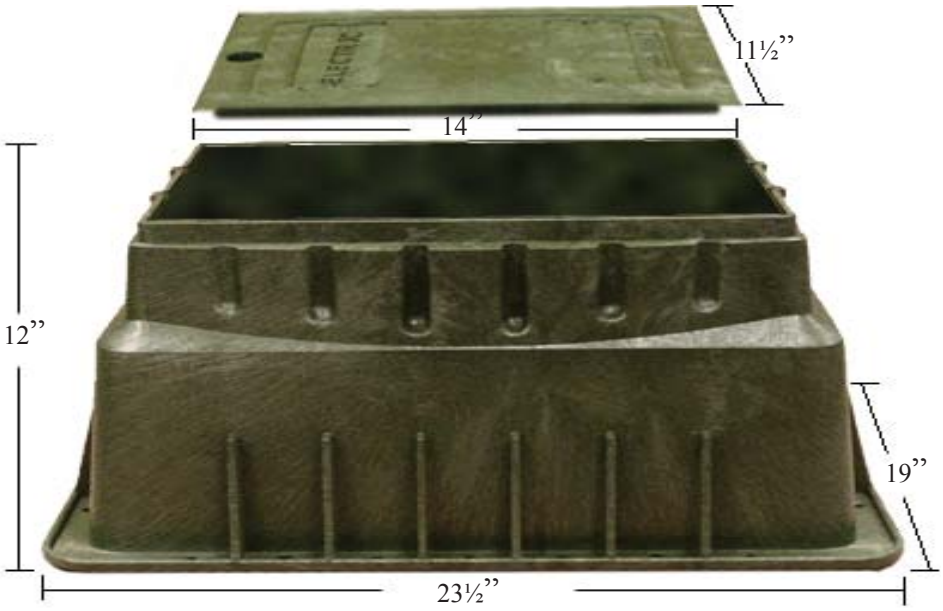

(Top View)

Lock Detail

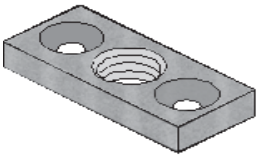
Locking Plate

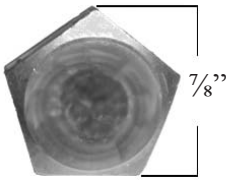

Head Dimensions of Penta Bolt

GENERAL: Lighting junction box with reinforcing ribs and cover with recessed penta-head locking bolt.

SPECIFICATIONS: Enclosure shall be molded of green high density polyethelene with a min. thickness of 5/16”. Cover shall be made of high density polyethylene. The word “ELECTRIC” shall be molded into the cover. The text shall be at least 1” tall.

RATING: **Only use in non-vehicular traffic situations. Not recommended for use in concrete or asphalt.**

SIZE: Exterior dimensions of the base must be a minimum of 15¼” x 20½” x 12” high.

PURCHASING: UOM: Each
Each unit shall include cover and penta head locking bolt.
Enclosure must include 1/2” Penta-head bolts with 7/8” heads.

STOCK NUMBER	TYPE	APPROVED MANUFACTURERS & CATALOG NUMBERS		
		CARSON INDUSTRIES	PENCELL / HUBBELL	APPLIED ENG.
22097799	LIGHTING	**1419-12-4+large penta-GE**	**PE14HDX005P3**	**1015T-1G2G-penta**

Rev. 01-19-16 DH “Updated Pencell catalog number to Hubbell reference number
Rev. 11-19-13 DH “Removed requirement for “electric” in two places.”
Rev. 09-15-08 DH “Updated Carson Ind. and Applied Eng. catalog numbers for penta head requirement.”
Rev. 12-22-05 DH “Added Penta Bolt Head dimension requirements; updated ‘Carson’ catalog number.”

PUBLIC UTILITY DISTRICT #2 OF GRANT COUNTY	Date	03/24/87	ENCLOSURE, LIGHTING BOX	ASSEMBLY UNIT	Yes		
	Rev #	7					
	Designer	RS		TDSI X	TTNI	TMNI	TSNI
	Standards Engineer AL SILVA			**22097799**			

COVER, 6’2” x 5’0”, 45 kVA - 500 kVA TRANSFORMER

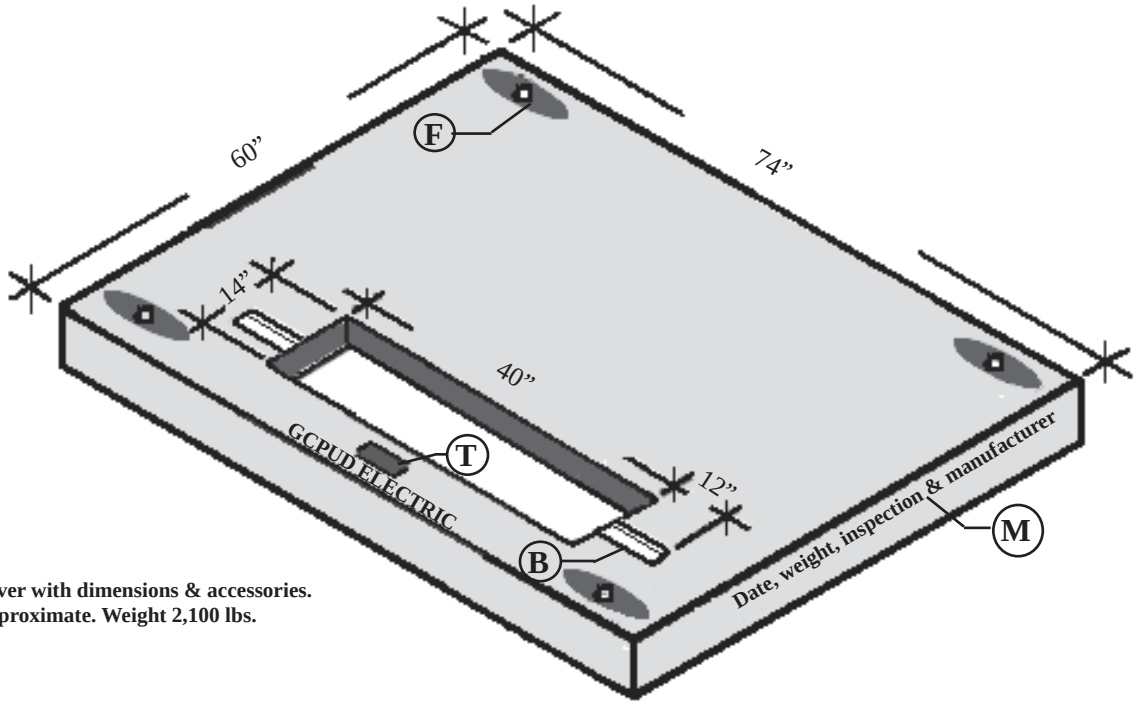

Cover with dimensions & accessories.
Approximate. Weight 2,100 lbs.

GENERAL: Cover for 3 phase (45 kVA - 500 kVA) pad mount transformer vaults.

SPECIFICATIONS: Concrete cover shall be constructed per the Districts Precast Concrete Product Specification #03800: ***S:\DATA\STANDARD\Product Specifications/ 03800 Precast Concrete Products.*** The cover must support at least 6,500 lbs. The cover the words “GCPUD ELECTRIC” on the front as shown.

B. Galvanized C Channel 6” long 1-½ X 1-½ X 12” One (1) on each side of the slot. 2 each cover.

F. Burke’s Lifting Eye (4) in each corner on the cover. 8 each vault and cover. Size as required for lifting load.

M. Date,Weight and Inspection Stamp Paper or plastic tags shall not be accepted.

T. Vault Tag Impression - 5 1/2” X 2” Impression centered as shown. One each.

PURCHASING: **Include stock page with each purchase request or contract bid document.**
See stock page #22022374 for vault.

OFF-LOADING: **Any units with pallets that are oversized, undersized, damaged, broken, have loose boards, or protruding nails or screws shall not be accepted.**

STOCK NUMBER	AU	SIZE		APPROVED MANUFACTURERS & CATALOG NUMBERS	
		L	W	UTILITY VAULT COMPANY	H-2 PRECAST
22402486	**U47V**	6’ 2”	5’ 0”	**504 PAD SPECIAL** drawing #BID-610 sheet 2 with 12” channel	**TPG7460-1640**

Rev. 10-04-12 MHS “ Added item “T” Tag Impression Note Changed title to ‘Cover’”.
Rev. 04-12-11 MHS “Updated Specifications & Page.”
Rev. 05-06-09 DH “Updated H2 catalog number; Added stock page and specifications inclusion note.”
Rev. 09-15-06 DH “Added Burke’s lifting eyes to specs; reformatted page in InDesign.”

PUBLIC UTILITY DISTRICT #2 OF GRANT COUNTY	Date	12/04/89	COVER, 6’2” x 5’0” 45 kVA - 500 kVA TRANSFORMER	ASSEMBLY UNIT	Yes		
	Rev #	7					
	Designer	GW		TDSI X	TTNI	TMNI	TSNI
	Standards Engineer AL SILVA			**22402486**			

COVER, 4’8” x 4’8”

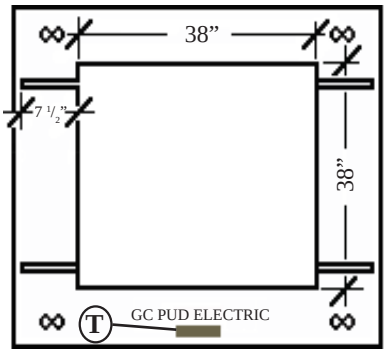

Secondary cabinet cover without hatch

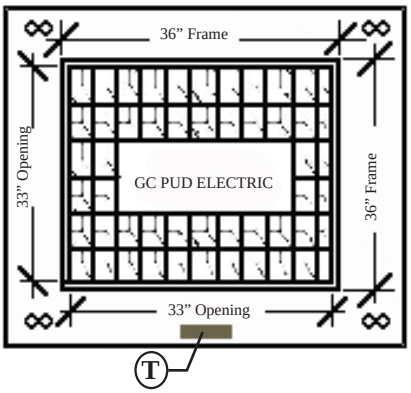

Chevron 36” Square Grate Hatch

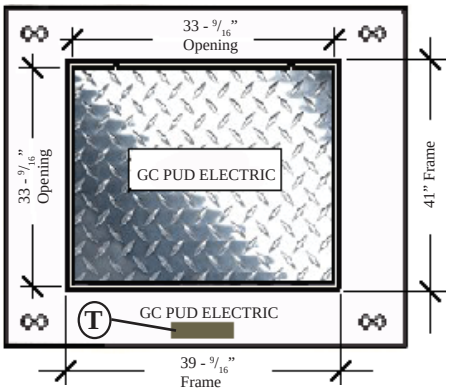

Diamond Plate 36” Square Steel Hatch for Electric

GENERAL: Covers for 4’ 8” vaults.

SPECIFICATIONS: Concrete cover constructed per the Districts Precast Concrete Product Specification #03800: *S:\Data\STANDARD\SPECIFICATIONS/District Specs/03800 Precast Concrete Products.* Stock 22142378 & 22152378 covers shall have the words**, “GRANT COUNTY PUD ELECTRIC”** or **“GCPUD ELECTRIC”** and stock 22152379 shall have the words **“GRANT COUNTY PUD FIBER”** or **“GCPUD FIBER”**either welded, imprinted or embossed in the center or along the concrete**.** On the Secondary cabinet cover 22052078, “GCPUD ELECTRIC” shall be made in the concrete. The cover shall have 4 Burke’s lifting eye, one at each corner. The secondary cover shall have four (4) 3/4” unistrut channels 7.5” long poured in the concrete, a minimum of 6” from the corner as shown.
Secondary cabinet cover shall have a minimum 38” opening.
T. Vault Tag Impression - 5 1/2” X 2” Impression centered as shown. Total One each cover.

PURCHASING: Quantity “Each”
Include stock page with each purchase request or contract bid document.
Fiber valt cover is the same as the electric “Diamond Plate” shown above with fiber instead of Electric on it.

OFF-LOADING: **Covers shall be shipped on pallets. Any units with pallets that are oversized, undersized, damaged, broken, have loose boards, or protruding nails or screws shall not be accepted.**

STOCK NUMBER	AU #s	TYPE	WEIGHT	APPROVED MANUFACTURERS & CATALOG NUMBERS	
				UTILITY VAULT	H-2 PRECAST
22052078	**U50VS**	**OPEN TOP**	**979 lbs**	**55-CAB-GCPUD**	**TPG550-3838**
22142378	**-------**	**LOCK PRESSED GRATE**	**1045 lbs.**	**55-332**	**VLG550-13PL-G**
22152378	**U54D U54V**	**DIAMOND PLATE**	**1031 lbs.**	**55-332P**	**VLG550-13PL**
22152379	**J232**	**DIAMOND PLATE**	**1031 lbs.**	**55-332P-FIBER**	**VLG550-13PL-FIBER**

Rev. 10-04-12 MHS “ Added item “T” Tag Impression Note, changed title to ‘Cover’.”
Rev. 04-12-11 MHS “Changed hatch specifications to USF Standard added AU #s added 22152379 for Fiber.”
Rev. 05-06-09 DH “Updated H2 catalog number; Added stock page and specifications inclusion note.”
Rev. 10-14-08 DH “Changed size in the title.”

PUBLIC UTILITY DISTRICT #2 OF GRANT COUNTY	Date	12/04/01	COVER 4’8” x 4’8”	ASSEMBLY UNIT: Yes
	Rev #	10		
	Designer	GW		TDSI X / TTNI / TMNI / TSNI
	Standards Engineer AL SILVA			**22052078**

COVER, 4’8” x 4’8”

Hatch Specification:

The access hatches shall be made by USF Fabrication or equal and be in accordance with drawing #57667 with 1/4” aluminum diamond plate, slamlock with penta head bolt, recessed option for padlock. 180° opening with a lock position at 90°.
Hatches shall have a minimum of 33” (inches) clear opening.
See page 1 of 2 for drawing number with other hatch details.

Grate Specifications

The grate shall be hot dipped galvanized steel with the following minimum characteristics.
Grate shall be lift out without hinges, and shall be provided with penta head lock down bolts and holders on two opposing sides.
Press locked bar grating, also known as dovetailed. Galvanized steel-200 smooth, 2” X $^{3}/_{16}$” bearing bars, 1 - $^{3}/_{16}$” on center, rectangular cross bars 4” on center.
Grate frames shall be 1-½” X 2” galvanized steel with concrete imbeds as shown below.
Frame and grate shall be installed so that the cover top, concrete, frame and grate are flush, flat and level with each other as shown below.
Grate frame shall have a minimum 33” opening.

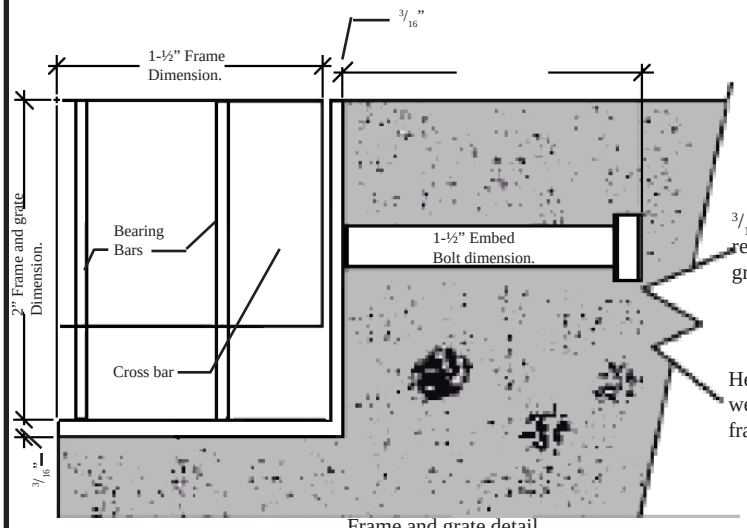

Frame and grate detail.

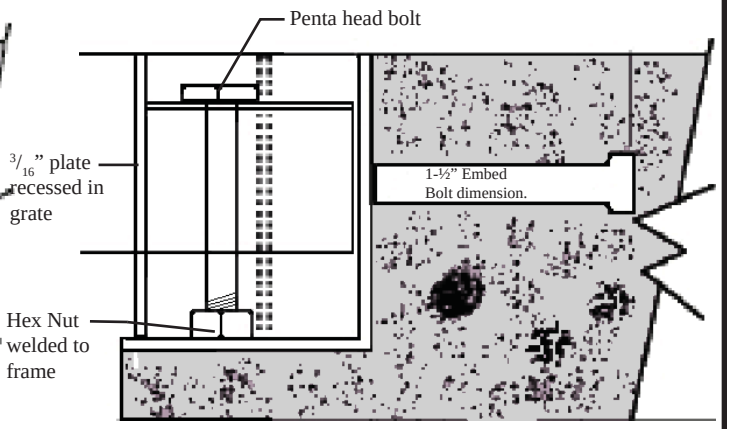

Frame and grate lock down detail with penta bolt & $^{3}/_{16}$” plate recessed into the grate on two sides.

PUBLIC UTILITY DISTRICT #2 OF GRANT COUNTY	Date	12/04/01	COVER 4’8” x 4’8”	ASSEMBLY UNIT	Yes		
	Rev #	10					
	Designer	GW		TDSI X	TTNI	TMNI	TSNI
	Standards Engineer AL SILVA			22052078			

ENCLOSURE, FIBER OPTIC JUNCTION BOX

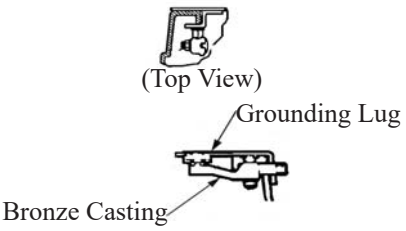

Lock and Ground Detail

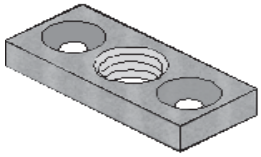

Locking Plate

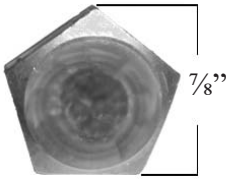

Head Dimensions of Penta Bolt

GENERAL: Fiber Optic junction box and cover

SPECIFICATIONS: Enclosure shall be molded of high density polyethelene (HDPE) meeting ANSI/SCTE 77 TIER 22. The body of the enclosure shall have straight walls with ribbed sidewalls. The interior of the enclosure shall have flushed mounted racks. Cover shall be a “SHIELD X” made of composite material with an anti-slip grid design, capable of handling 33,750 lbf. The cover shall have a permanently attached tag, with the embossed words “GRANT PUD FIBER”. The enclosure shall include a marker locator device.
Enclosure must include 1/2” Penta-head bolts with 7/8” heads.

RATING: **Only use in non-vehicular traffic situations. Not recommended for use in concrete or asphalt**.

PURCHASING: UOM: Each Order in quantities of 12 per pallet.

STOCK NUMBER	TYPE	SIZE (inches)						APPROVED MANUFACTURERS & CATALOG NUMBERS
		ENCLOSURE			COVER			CHANNELL
		L	W	H	L	W	H	
22097714	FIBER	27½	18⅛	18	23¼	13¾	2	**BULKU1324180062310**
22097721	OPTIC TAPS	33⅜	21¾	24	30½	17½	2	**BULKU1730240062310**

Rev. 11-05-19 DH “Added larger size box for optic taps.”
Rev. 05-10-19 RP “Removed Pencell/Hubbell as approved manufacturer and replaced with Channell”.
Rev. 05-30-18 DH “Corrected catalog number by removing the “F”.
Rev. 06-01-16 DH “Changed catalog number for “Fiber Optic” tag

PUBLIC UTILITY DISTRICT #2 OF GRANT COUNTY	Created	09/14/00	ENCLOSURE, FIBER OPTIC BOX	ASSEMBLY UNIT	Yes
	Rev #	9			
	Designer	MHS		TDSI X / TTNI / TMNI / TSNI	
	Standards Engineer E. WENKE			**22097714**	

VAULT & COVER, SPLICING, 9’ x 5’

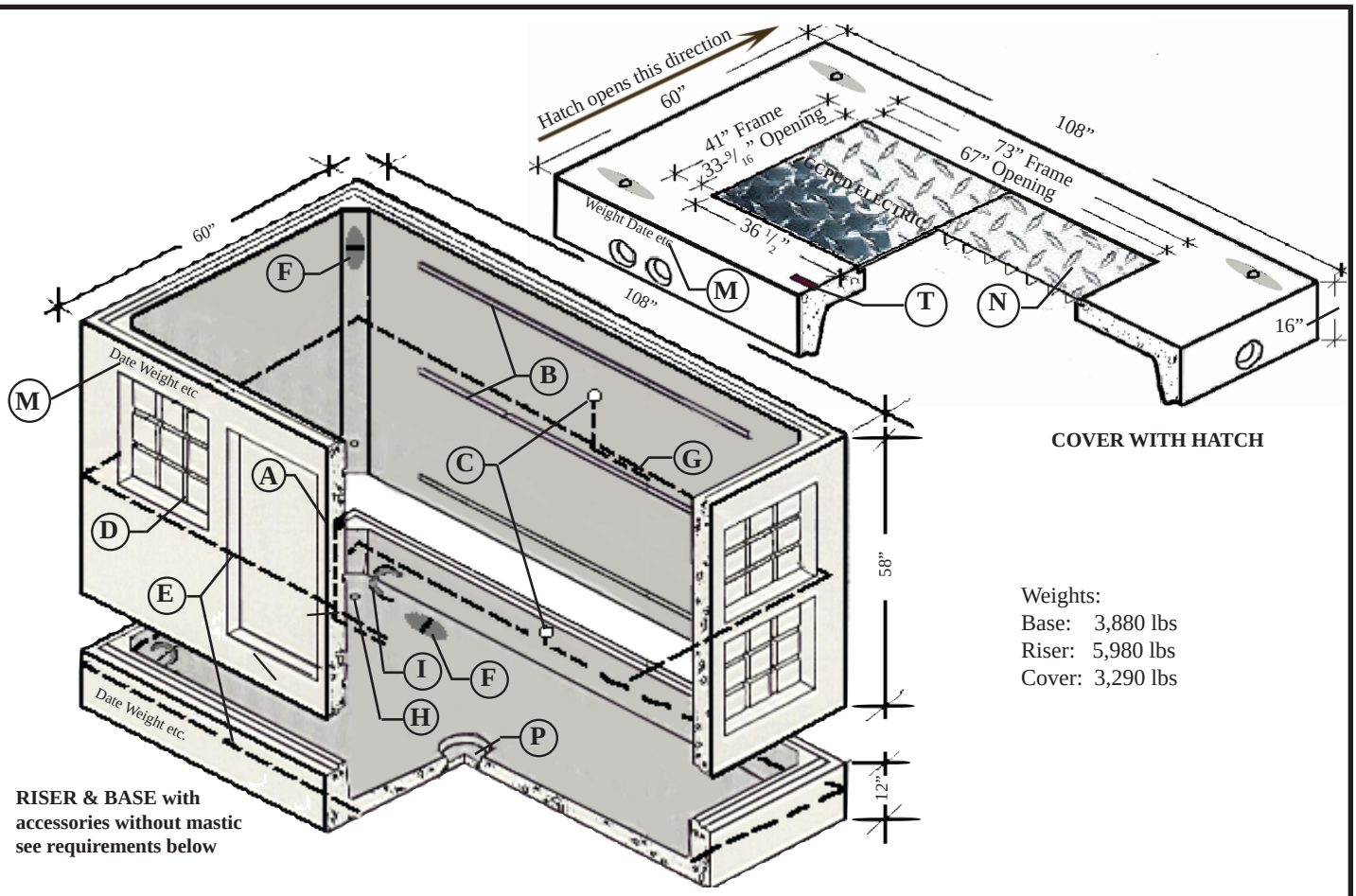

Weights:
Base: 3,880 lbs
Riser: 5,980 lbs
Cover: 3,290 lbs

GENERAL: Vault and cover for splicing electric cable.

SPECIFICATIONS: Concrete vault and cover constructed per the Districts Precast Concrete Product Specification #03800: *S:\Data\STANDARD\SPECIFICATIONS/District Specs/03800 Precast Concrete Products.*
Each cover shall have the words, **“GRANT COUNTY PUD ELECTRIC”** or **“GCPUD ELECTRIC”** either welded, imprinted or embossed in the center or along the concrete as shown above.

PURCHASING: Quantity “Each”
Include stock page with each purchase request or contract bid document.

STOCK NUMBER		AU#	SIZE			APPROVED MANUFACTURERS & CATALOG NUMBERS	
			L	W	D	UTILITY VAULT	H-2 PRECAST
22023083	VAULT	**U56V**	9’ 0”	5’ 0”	5”10	**4484-LA**	**VB4484B & VB4484D**
	COVER		9’ 0”	5’ 0”	16”	**4484-TL2-332P**	**VLG4484-23PL**

Rev. 10-04-12 MHS “ Added item “T” Tag Impression Note, changed title to ‘Vault & Cover’.”
Rev. 04-12-11 MHS “Changed hatch to USF, added AU# reformated correct specifications.”
Rev. 05-06-09 DH “Updated H2 catalog number; Added stock page and specifications inclusion note.”
Rev. 06-25-07 DH “Combined with cover 22142385; Changed rebar size in construction notes; Added shipping note.”

PUBLIC UTILITY DISTRICT #2 OF GRANT COUNTY	Date	12/04/89	VAULT & COVER, SPLICING,9’ x 5’	ASSEMBLY UNIT: Yes
	Rev #	11		
	Designer	GW		TDSI X / TTNI / TMNI / TSNI
	Standards Engineer: AL SILVA			**22023083**

VAULT & COVER, SPLICING, 9’ x 5’

OFF-LOADING: **Units shall be shipped on pallets or dunnage. Any units with pallets that are oversized, undersized, damaged, broken, have loose boards, or protruding nails or screws shall not be accepted.**

CONSTRUCTION NOTES: Joints shall be constructed so that the various units interlock when assembled. The mastic between sections shall be ¾” thick.

The vault shall be constructed with the following items included:

A. Exterior Grounding Connection System
⅜” dia. steel lead with ½” dia. bronze grounding inserts & cap protector, 1 each located on each long side of riser, see welding detail below. Total 2.

B. Galvanized C Channel 4’ long
Three (3) on each long side of the riser section. Total 6.

C. Interior Grounding Connection System
⅜” dia. steel lead with ½” dia. bronze grounding inserts & cap protector, 4 each located in the center of the interior riser walls and 2 each located on the interior long sides of the base, see welding detail below. Total 6.

D. Precast Knockouts
On all four (4) sides of riser for installing conduits, see page 1 of two for general locations. As shown.

E. Grounding Bar
Minimum length of 30 feet of #4 rebar around the vault perimeter, one each in the vault body and base. Total 2.

F. Burke’s Lifting Eye
4 each in the cover, base and riser. Total 12.
Size as required for lifting loads imposed.

G. Weld Detail
(see drawing below)

H. Ground Rod Knockouts 1” dia.
Spaced in four corners of the base. Total 4.

I. Galvanized Pulling Loops
Loops shall be capable of supporting the entire weight of the assembled vaullt.
2 each positioned 6 to 8 inches from both sides of each corner . Total 8.

M. Date, Manufacturer, Inspection Stamp & Weight. Stamped or stenciled on each piece

N. Hatch
Hatch shall be equal to USF double hatch, drawing #57804 with 1/4” alu minum diamond plate, slamlock with penta head bolt, recessed option for padlock and 180° opening with 90° stop. Include interior release handle.

P. Drain Sump - centered in the middle of the floor Total 1.

T. Vault Tag Impression - 5 ½” X 2” Impression centered in the middle as shown. Total 1.

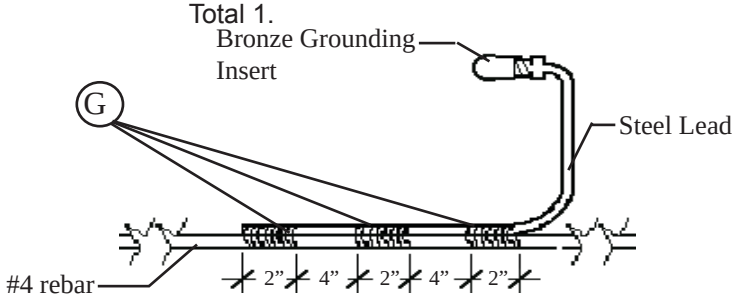

Enlarged View of Weld Detail

PUBLIC UTILITY DISTRICT #2 OF GRANT COUNTY	Date	12/04/89	VAULT & COVER, SPLICING,9’ x 5’	ASSEMBLY UNIT	Yes
	Rev #	11			
	Designer	GW		TDSI X / TTNI / TMNI / TSNI	
	Standards Engineer AL SILVA			22023083	

VAULT & COVER, LOADBREAK BUS JUNCTION

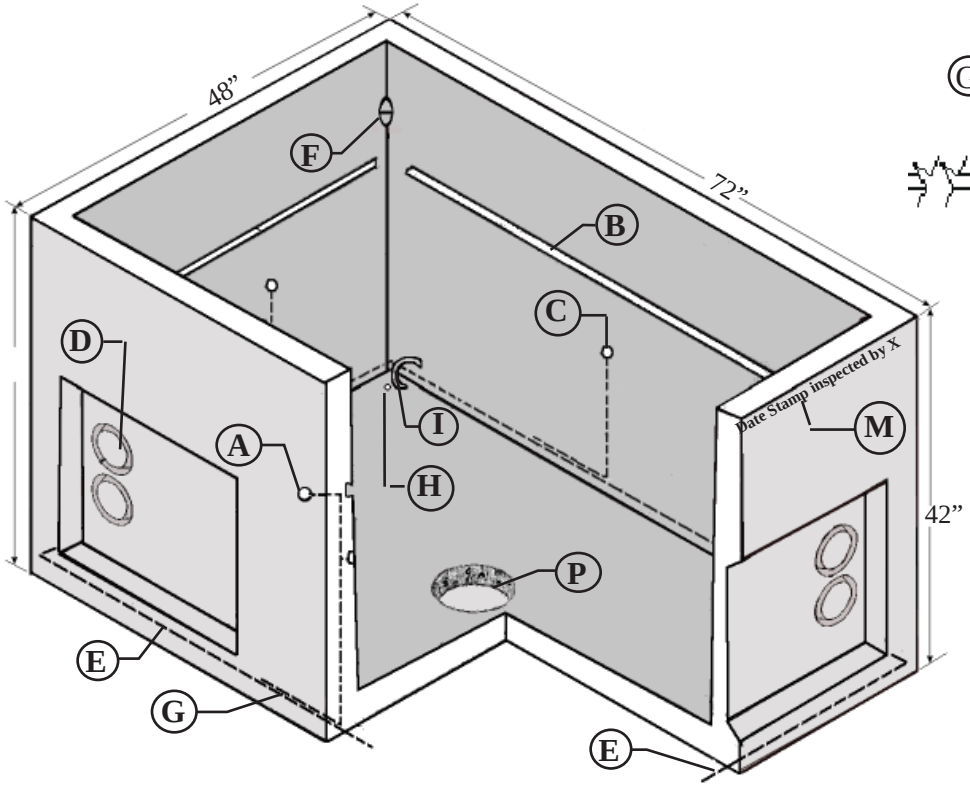

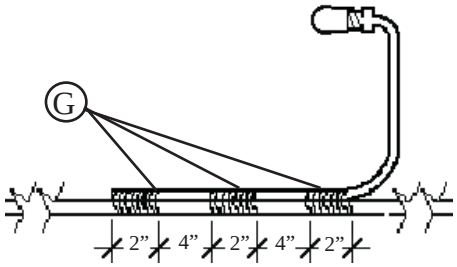

Enlarged View of Weld Detail

GENERAL: Vault and cover for splicing cable, junctions, and switching.

SPECIFICATIONS: Concrete Vault constructed per the Districts Precast Concrete Product Specification #03800: *S:\Data\STANDARD\SPECIFICATIONS/District Specs/03800 Precast Concrete Product**s.*** Each cover shall have the words, **“GRANT COUNTY PUD ELECTRIC”** or **“GCPUD ELECTRIC”** either welded, imprinted or embossed in the center or along the concrete as shown above.

PURCHASING: UOM: Each
Include stock page with each purchase request or contract bid document.

STOCK NUMBER		AU	SIZE		APPROVED MANUFACTURERS & CATALOG NUMBERS	
			L	W	UTILITY VAULT COMPANY	H-2 PRECAST
22022462	VAULT	U55V	6’	4’	**644-L w/ grounding system**	**VBG464**
	COVER		6’8”	4’8”	**64-2-332P**	**----**
			6’10”	4’6”	**----**	**VLG460-23PL**

Rev. 06-10-15 DH “Changed cover size for H2 Precast.
Rev. 10-04-12 MHS “ Added item “T” Tag Impression Note, changed title to ‘Vault & Cover’.”
Rev. 04-12-11 MHS “combined with cover 22152459; Updated specifications, added USF hatch.”
Rev. 05-06-09 DH “Updated H2 catalog number; Added stock page and specifications inclusion note.”

PUBLIC UTILITY DISTRICT #2 OF GRANT COUNTY	Date	05/07/91	VAULT & COVER, LOADBREAK BUS JUNCTION	ASSEMBLY UNIT	Yes		
	Rev #	11					
	Designer	HC		TDSI X	TTNI	TMNI	TSNI
	Standards Engineer AL SILVA			22022462			

VAULT & COVER, LOADBREAK BUS JUNCTION

OFF-LOADING: **Vaults with covers shall be shipped on pallets. Any units with pallets that are oversized, undersized, damaged, broken, have loose boards, or protruding nails or screws shall not be accepted.**

CONSTRUCTION NOTES: Joints shall be constructed so that the various units interlock when assembles. The vault shall be constructed with the following items included:

A. Exterior Grounding Connection System
⅜" dia. steel lead with ½" dia. bronze grounding inserts & cap protector, located on each long side of riser. 2 each vault.

B. Galvanized C Channel 4' long
One (1) on each side. 4 each vault.

C. Interior Grounding Connection System
⅜" dia. steel lead with ½" dia. bronze grounding inserts & cap protector, located on all 4 sides. 4 each vault.

D. Precast Knockouts
On all four (4) sides of riser for installing conduits. As shown.

E. Grounding Bar #4
Minimum length of 20 feet of #4 rebar around the vault perimeter

F. Burke's Lifting Eye
(4) each in vault corners and in each corner on the cover. 8 total to be sized as required for lifting load.

G. Weld Detail (see drawing on page 1 of 2.)

H. Ground Rod Knockouts 1" dia.
Spaced evenly on 4 places in the floor of the base. 4 each vault.

I. Galvanized Pulling Loops
Loops shall be capable of supporting the entire weight of the unit. Positioned less than 6" from the corner in each corner. 4 each vault.

M. Date, Weight & Inspection Stamp Paper or plastic tags shall not be accepted.

N. Hatch
Hatch shall be equal to USF double hatch, drawing #57804 with 1/4" aluminum diamond plate, slamlock with penta head bolt, recessed option for padlock and 180° opening with 90° stop. Include interior release handle.

P. Drain Sump - centered in the middle of the floor

T. Vault Tag Impression - 5 ½" X 2" Impression centered in the middle as shown. Total 1.

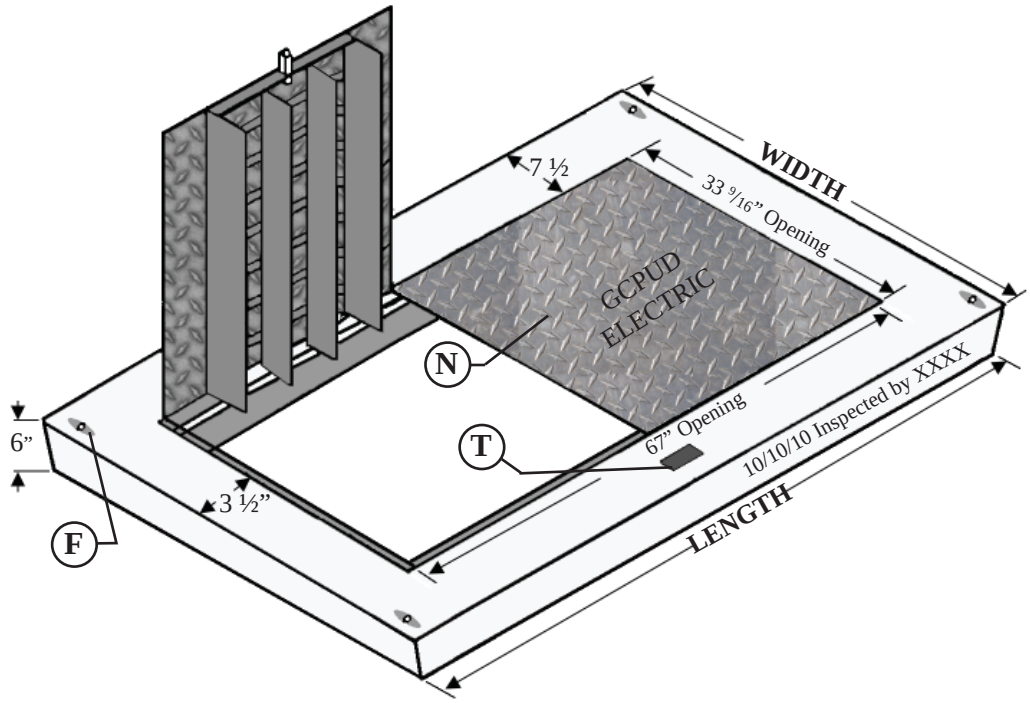

PUBLIC UTILITY DISTRICT #2 OF GRANT COUNTY	Date	05/07/91	VAULT & COVER, LOADBREAK BUS JUNCTION	ASSEMBLY UNIT	Yes		
	Rev #	11					
	Designer	HC		TDSI X	TTNI	TMNI	TSNI
	Standards Engineer AL SILVA			22022462			

VAULT, JUNCTION, 4’8” x 4’8”

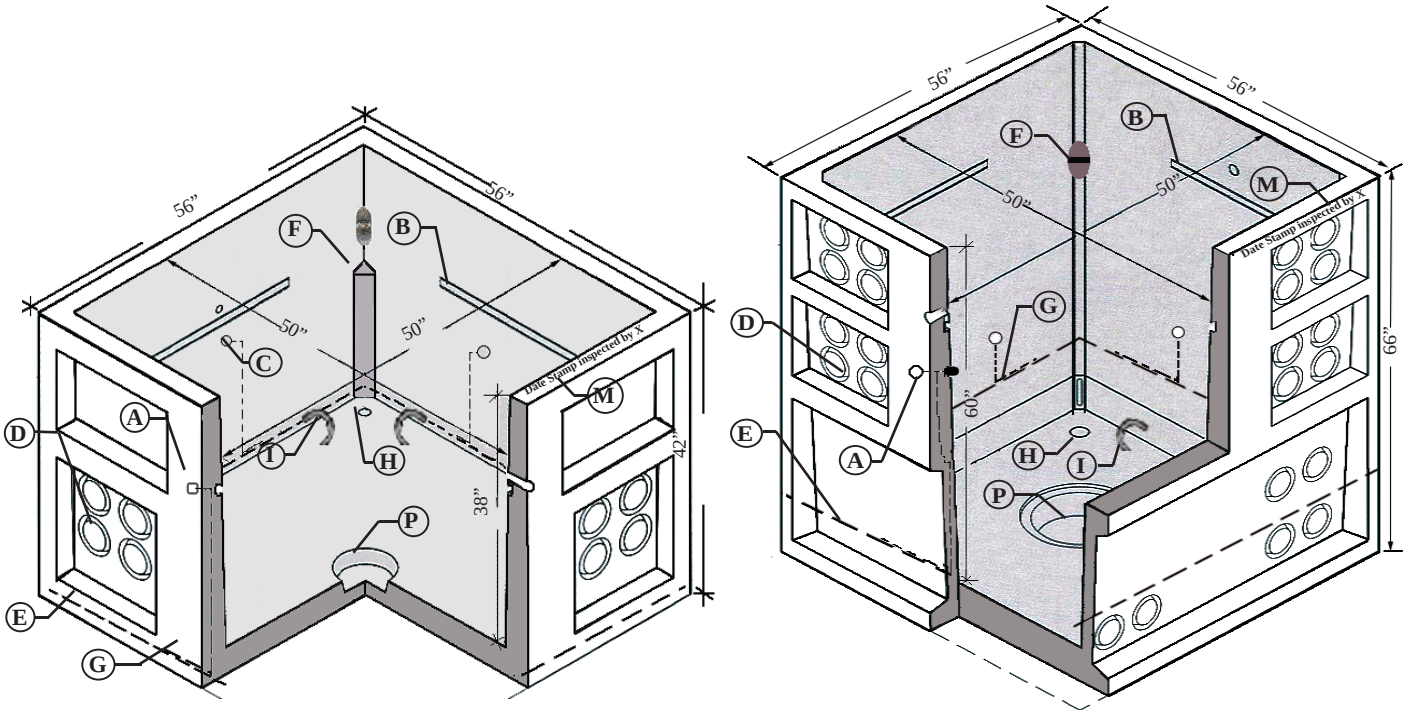

GENERAL: Vault for electrical cable switching and transformer installations

SPECIFICATIONS: Concrete Vault constructed per the Districts Precast Concrete Product Specification #03800:
S:\Data\STANDARD\SPECIFICATIONS/District Specs\03800 Precast Concrete Products
Unit must support 4000 lbs. transformer loading.

PURCHASING: **Include stock page and District specification with each purchase request.**
For various applications see these stock numbers.
#22022491 for Farm Irrigation Cover (*Assembly Unit #U48VF*)
#22052078 for Secondary Cabinet Cover. (*Assembly Unit # U50VS*)
#22152378 for Junction Cover. (*Assembly Unit # U54V*)
#22152379 for Fiber Cover. (*Assembly Unit #J232*)
#22402486 for 45 kVA - 500 kVA 3 phase Transformer Cover. (*Assembly Unit # U47V*)
#22412478 for 15 kVA - 167 kVA 1 phase Transformer Cover. (*Assembly Unit # U46V*)

OFF-LOADING: **Vaults shall be shipped on pallets. Pallets that are oversized, undersized, damaged, broken, have loose boards, or protruding nails or screws shall not be accepted.**

STOCK NUMBER	ASSEMBLY UNIT	HEIGHT	APPROVED MANUFACTURERS & CATALOG NUMBERS	
			UTILITY VAULT	H-2 PRECAST
22022374	J232, U47V U46V, U48VF, U50VS, U54V	3’6”	**504-L w/ grounding system**	**VBG554**
22022377	U54D	5’6”	**506-L w/ grounding system**	**VBG556**

Rev. 09-30-13 DH “Added AU for farm vault.”
Rev. 07-06-11 DH “Corrected Assembly Unit information; added AU for fiber.”
Rev. 04-12-11 MHS “Updated specifications added AU #s.”
Rev. 05-06-09 DH “Updated H2 catalog number; Added stock page and specifications inclusion note.”

PUBLIC UTILITY DISTRICT #2 OF GRANT COUNTY	Date	05/06/91	VAULT, JUNCTION, 4’8” x 4’8”	ASSEMBLY UNIT	Yes		
	Rev #	11					
	Designer	HC		TDSI X	TTNI	TMNI	TSNI
	Standards Engineer AL SILVA			**22022374**			

VAULT, JUNCTION, 4’8” x 4’8”

CONSTRUCTION NOTES: The vault shall be constructed with the following items included:

A. Exterior Grounding Connector System
⅜” dia. steel lead with ½” dia. bronze grounding inserts & cap protector, 1 each located on each long side of riser, see welding detail below. Total 2.

B. Galvanized C Channel 4’ long
One (1) on each side of the riser section. Total 4.

C. Interior Grounding Connector System
⅜” dia. steel lead with ½” dia. bronze grounding inserts & cap protector, 4 each located in the center of the interior riser walls, see welding detail below. Total 4.

D. Precast Knockouts
On all four (4) sides of riser for installing conduits, see page 1 of two for general locations. As shown.

E. Grounding Bar
Minimum length of 20 feet of #4 rebar around the vault perimeter, one each in the vault wall. Total 1.

F. Burke’s Lifting Eye
4 each in the riser walls. Total 4.
Size as required for lifting loads imposed.

G. Weld Detail
(see drawing below)

H. Ground Rod Knockouts 1” dia.
In two opposite corners 2 places in the floor of the riser. Total 2.

I. Galvanized Pulling Loops
Loops shall be capable of supporting the entire weight of the assembled vault.
4 each positioned in the center of the wall on each side of the riser floor. Total 4.

M. Date, Manufacturer, Inspection Stamp & Weight. Stamped or stenciled on each piece

P. Drain Sump - centered in the middle of the floor Total 1

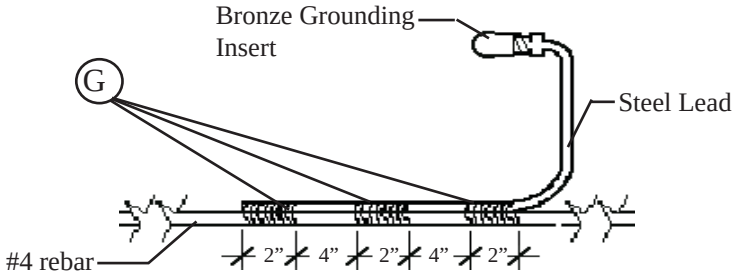

Enlarged View of Weld Detail

PUBLIC UTILITY DISTRICT #2 OF GRANT COUNTY	Date	05/06/91	VAULT, JUNCTION, 4’8” x 4’8”	ASSEMBLY UNIT	Yes	
	Rev #	11				
	Designer	HC		TDSI X	TTNI	TMNI / TSNI
	Standards Engineer AL SILVA			22022374		

VAULT & COVER, HANDHOLE, FIBER

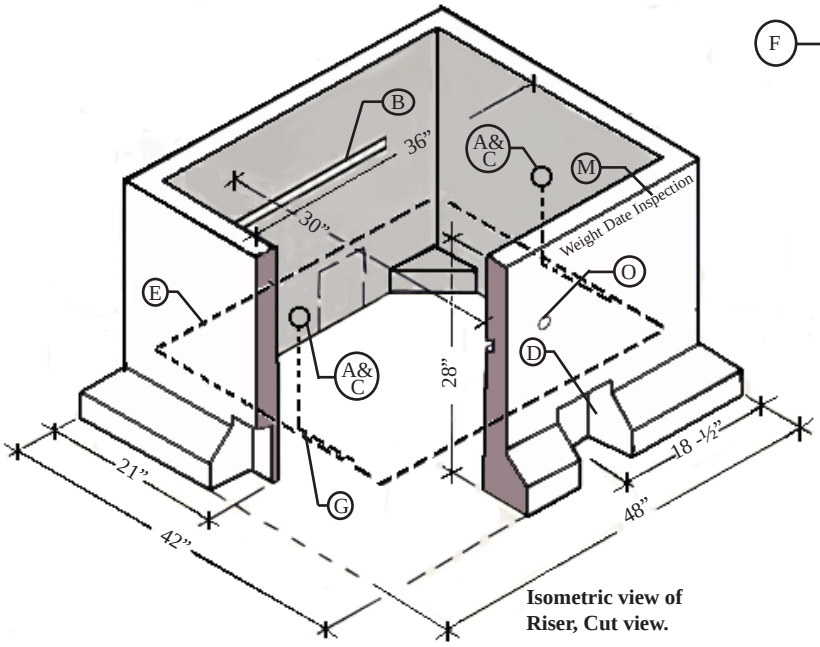

Isometric view of Riser, Cut view.

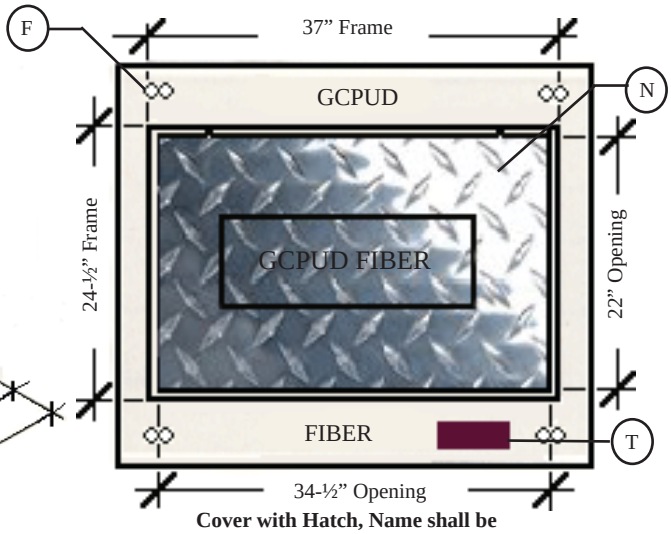

Cover with Hatch, Name shall be either in concrete or lid as shown

Weights: Approximate:
Handhole 1,250 lbs.
Cover: 525 lbs.

GENERAL: Vault for fiber cable junctions, storage & splice enclosures.

SPECIFICATIONS: Concrete Vault constructed per the Districts Precast Concrete Product Specification #03800: *S:\Data\STANDARD\SPECIFICATIONS/District Specs/03800 Precast Concrete Products.*
Each cover shall have the words, **"GRANT COUNTY PUD FIBER"** or **"GCPUD FIBER"** either welded, imprinted or embossed in the center or along the concrete as shown above.

Vault walls must support 4,000 psi side wall pressure for traffic along side.

PURCHASING: Quantity "Each"
Include stock page with each purchase request or contract bid document. See page 2 of 2 for dimensions.

OFF-LOADING: **Handholes shall be shipped on pallets. Any units with pallets that are oversized, undersized, damaged, broken, have loose boards, or protruding nails or screws shall not be accepted.**

STOCK NUMBER		AU#	SIZE			APPROVED MANUFACTURERS & CATALOG NUMBERS	
			L	W	D	UTILITY VAULT	H-2 PRECAST
22022329	VAULT	J230	48"	42"	28"	**3642 - BL**	**VBG-3642**
	COVER		42"	36"	4"	**3642-2436GPUD-FIBER**	**VLG3642-2436PL-FIBER**

Rev. 10-04-12 MHS " Added item "T" Tag Impression Note, changed title to 'Vault & Cover'."
Rev. 04-25-11 MHS "Changed hatch to USF or equal, and added AU#, added ground system."
Rev. 08-18-09 MHS "Reformatted page and changed cover stamp/imprint to 'fiber'."
Rev. 07-11-05 DJ "Added off-Loading notes, date and inspection requirements."

PUBLIC UTILITY DISTRICT #2 OF GRANT COUNTY	Date	02/02/88	VAULT & COVER, HANDHOLE, FIBER	ASSEMBLY UNIT: Yes
	Rev #	6		
	Designer	MB		TDSI X / TTNI / TMNI / TSNI
	Standards Engineer: AL SILVA			22022329

VAULT & COVER, HANDHOLE, FIBER

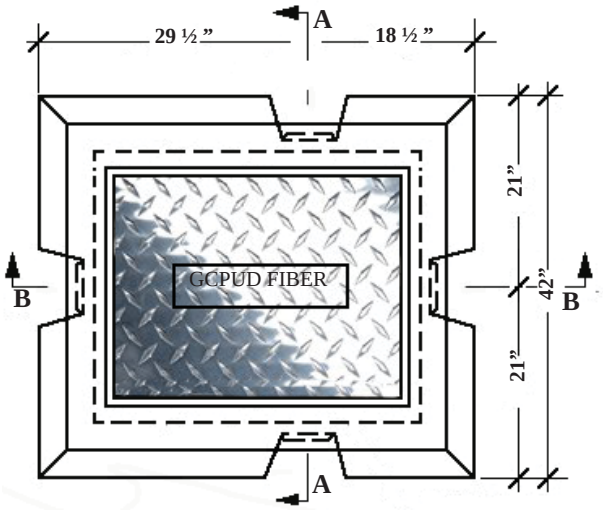

Top view with hatch

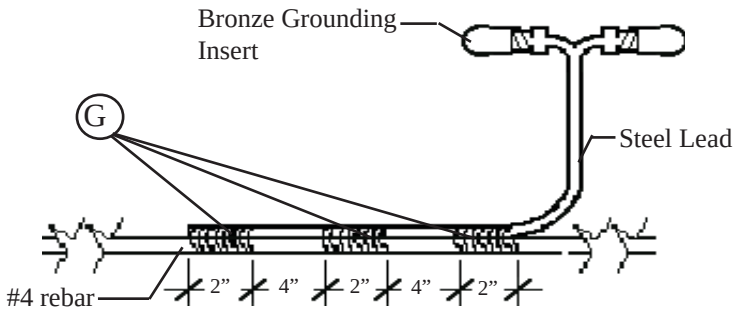

Enlarged View of Weld Detail (A&C)

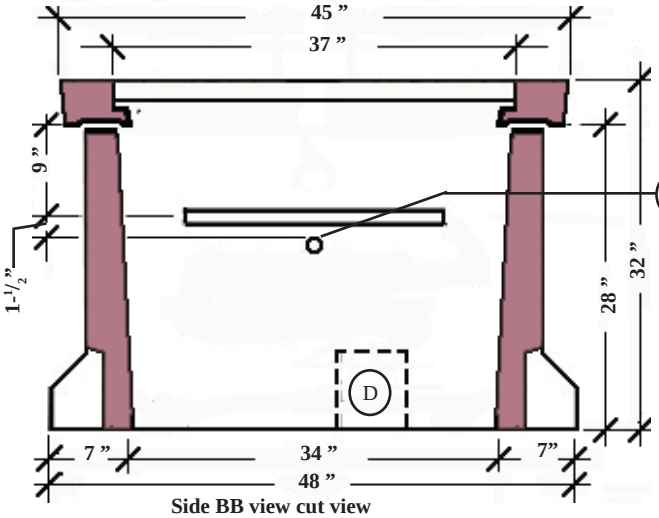

Side BB view cut view

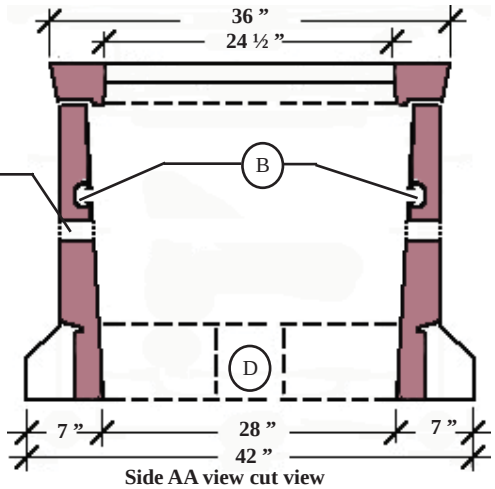

Side AA view cut view

Construction Notes

A&C. Exterior & Interior Ground Connection System.
⅜” dia. steel lead with ½” dia. bronze grounding inserts & cap protector, 2 each located back to back in the non-channel walls, see welding detail above. Total 2.

B. Galvanized C Channel 4’ long
Two (2) 26” (inches) long on opposite sides of the riser section. Total 2.

D. Precast Knockouts
On all four (4) sides of riser for installing conduits, see page 2 of two for general locations. As shown.

E. Grounding Bar
Minimum length of 20 feet of #4 rebar around the vault perimeter, 4” above the knockouts. Bar shall be lapped to fit. Total 1.

F. Burke’s Lifting Eye (Inserts shall not be accepted.)
4 each in the cover. Total 4. Size as required for lifting loads imposed.

G. Weld Detail for Ground Connections. See detail above.

M. Date, Manufacturer, Inspection Stamp & Weight. Stamped or stenciled on each piece. Paper or plastic shall not be accepted

N. Hatch
Hatch shall be equal to USF double hatch, drawing #57013 with 1/4” aluminum diamond plate, slamlock with penta head bolt, recessed option for padlock and 180° opening with 90° stop.

O. Lifting Holes
Handhole wall section shall have two (2) 1 - ½” lifting holes formed on two sides as shown on the drawing. Holes shall be round and smooth location shown. Total 2

T. Vault Tag Impression - 5 ½” X 2” Impression off set on the opening side as shown. Total 1.

PUBLIC UTILITY DISTRICT #2 OF GRANT COUNTY	Date	02/02/88	VAULT & COVER, HANDHOLE, FIBER	ASSEMBLY UNIT	Yes	
	Rev #	6				
	Designer	MB		TDSI X	TTNI	TMNI / TSNI
	Standards Engineer: AL SILVA			22022329		

VAULT & COVER, DEAD FRONT SWITCHGEAR

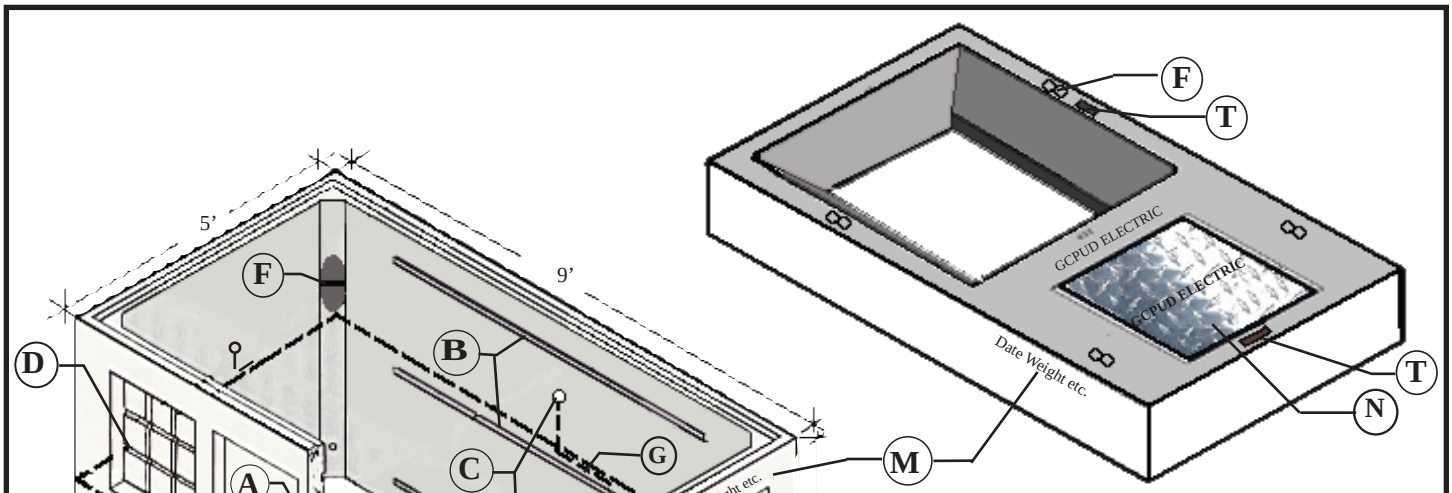

COVER WITH HATCH
See page 3 of 3 for details of cover.

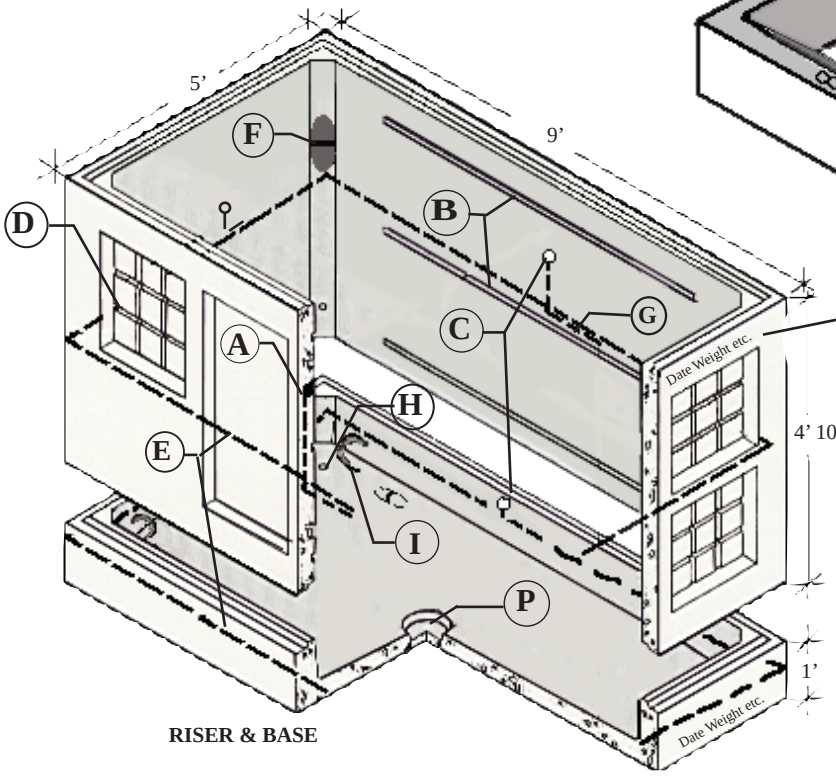

RISER & BASE

Weights:
Base: 3,880 lbs
Riser: 5,980 lbs
Cover: 2,690 lbs

GENERAL: Vault and cover for PSE/PME dead front switch gear.

SPECIFICATIONS: Concrete vault and cover constructed per the Districts Precast Concrete Product Specification #03800: *S:\Data\STANDARD\SPECIFICATIONS/District Specs/03800 Precast Concrete Products.*
Each cover shall have the words, **"GRANT COUNTY PUD ELECTRIC"** or **"GCPUD ELECTRIC"** either welded, imprinted or embossed in the center or along the concrete as shown above.

PURCHASING: Quantity "Each"
Include stock page with each purchase request or contract bid document.

STOCK NUMBER		AU #	SIZE			APPROVED MANUFACTURERS & CATALOG NUMBERS	
			L	W	D	UTILITY VAULT	H-2 PRECAST
22022092	VAULT	U56SG	9'	5'	5'10"	**4484-LA**	**VB4484B and VB4484D**
	COVER		9'	6' 8"	varies	**4484-2436-6552 PAD**	**TPG4484-2436PL-6265**

Rev. 10-04-12 MHS " Added item "T" Tag Impression Note, changed title to 'Vault & Cover'."
Rev. 04-12-11 MHS "Changed hatch to USF or equal. added AU#."
Rev. 03-02-10 MHS "Updated drawings and specifications."
Rev. 04-10-09 DH "Updated H 2 catalog number; Added stock page and specifications inclusion note."

PUBLIC UTILITY DISTRICT #2 OF GRANT COUNTY	Date	12/04/89	VAULT & COVER, DEAD FRONT SWITCHGEAR	ASSEMBLY UNIT	Yes
	Rev #	11			
	Designer	LW		TDSI X / TTNI / TMNI / TSNI	
	Standards Engineer AL SILVA			**22022092**	

VAULT & COVER, DEAD FRONT SWITCHGEAR

OFF-LOADING: **Units shall be shipped on pallets or dunnage. Any units with pallets that are oversized, undersized, damaged, broken, have loose boards, or protruding nails or screws shall not be accepted.**

CONSTRUCTION NOTES: Joints shall be constructed so that the various units interlock when assembled. The mastic between sections shall be ¾" thick.

The vault shall be constructed with the following items included:

A. Exterior Grounding Connection System
⅜" dia. steel lead with ½" dia. bronze grounding inserts & cap protector, 1 each located on each long side of riser, see welding detail below. Total 2.

B. Galvanized C Channel 4' long
Three (3) on each long side of the riser section. Total 6.

C. Interior Grounding Connection System
⅜" dia. steel lead with ½" dia. bronze grounding inserts & cap protector, 4 each located in the center of the interior riser walls and 2 each located on the interior long sides of the base, see welding detail below. Total 6.

D. Precast Knockouts
On all four (4) sides of riser for installing conduits, see page 1 of 2 for general locations. As shown.

E. Grounding Bar
Minimum length of 30 feet of #4 rebar around the vault perimeter, one each in the vault body and base. Total 2.

F. Burke's Lifting Eye
4 each in the cover, base and riser. Total 12.
Size as required for lifting loads imposed.

G. Weld Detail (see drawing below)

H. Ground Rod Knockouts 1" dia.
Spaced evenly in each corner 4 places in the floor of the base. Total 4.

I. Galvanized Pulling Loops
Loops shall be capable of supporting the entire weight of the assembled vault. 2 positioned 6 to 8 inches from each corner on each side of the base. Total 8.

M. Date, Manufacturer, Inspection Stamp & Weight.
Stamped or stenciled on each piece. Paper or plastic tags shall not be accepted.

N. Hatch
Hatch shall be equal to USF , drawing #57013 with 1/4" aluminum diamond plate, slamlock with penta head bolt, recessed option for padlock and 180° opening with 90° lock position. Include interior release handle.
Minimum hatch opening shall be 34-½" X 22" (inches)

P. Drain Sump - centered in the middle of the floor Total 1.

T. Vault Tag Impression - 5 - 1/2" x 2" One centered in the middle of right side opening & one centered along the hatch as shown. Total 2.

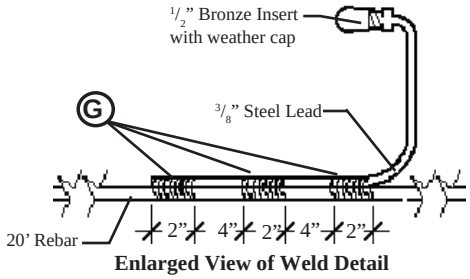

Enlarged View of Weld Detail

PUBLIC UTILITY DISTRICT #2 OF GRANT COUNTY	Date	12/04/89	VAULT & COVER, DEAD FRONT SWITCHGEAR	ASSEMBLY UNIT	Yes		
	Rev #	11					
	Designer	LW		TDSI X	TTNI	TMNI	TSNI
	Standards Engineer AL SILVA			22022092			

VAULT & COVER, DEAD FRONT SWITCHGEAR

Cross Section Views of the Vault Top.

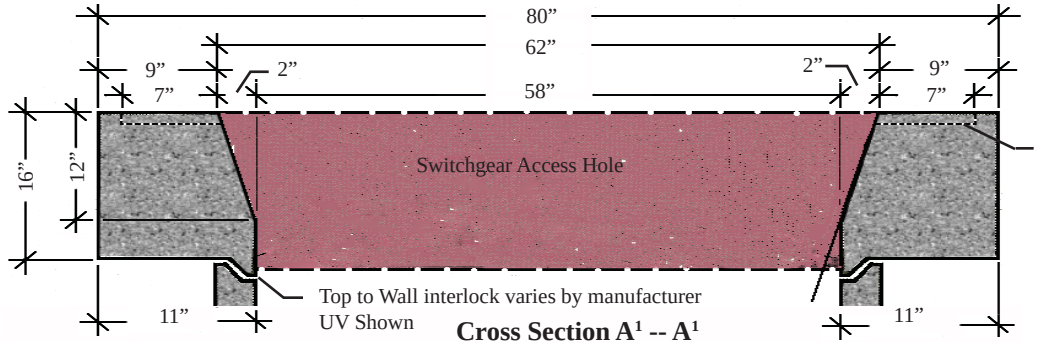

Cross Section A¹ -- A¹

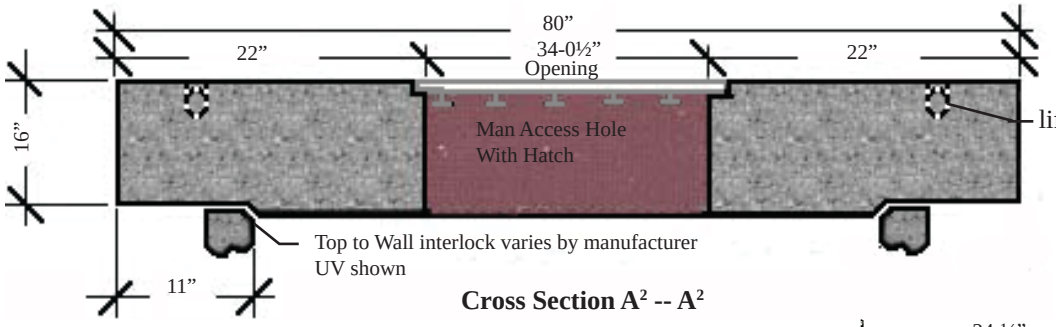

Cross Section A² -- A²

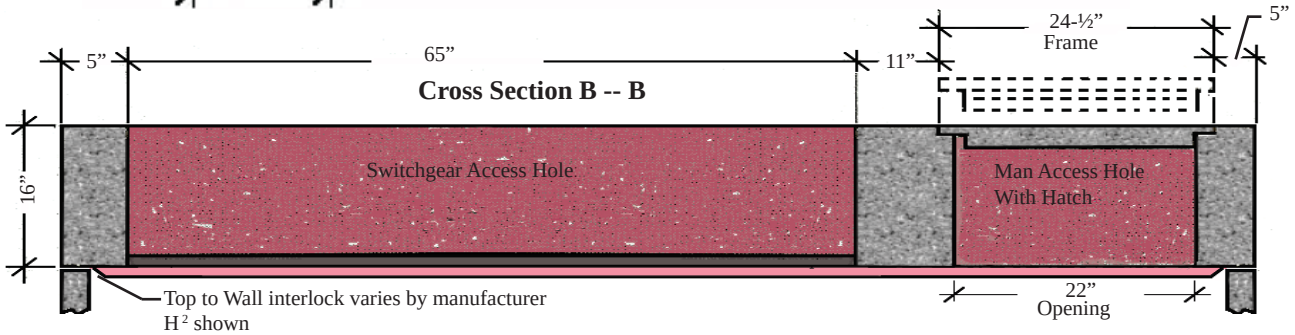

Cross Section B -- B

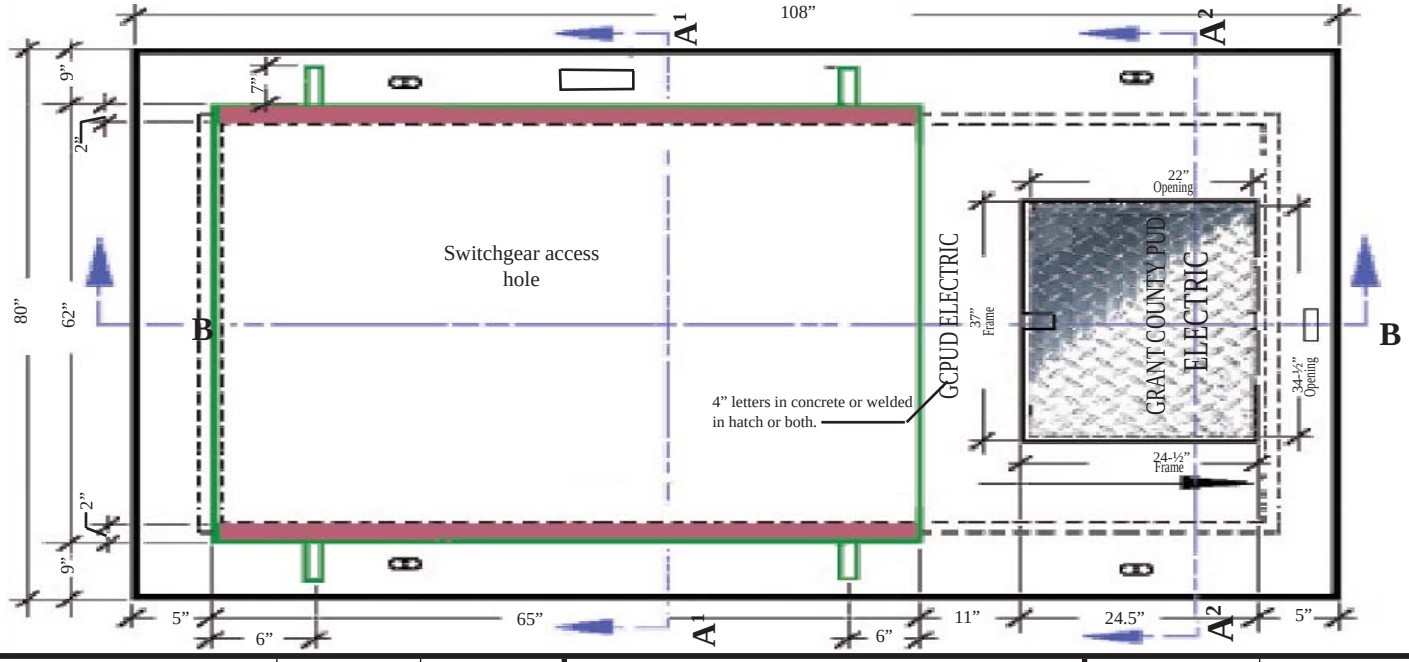

PUBLIC UTILITY DISTRICT #2 OF GRANT COUNTY	Date	12/04/89	VAULT & COVER, DEAD FRONT SWITCHGEAR	ASSEMBLY UNIT	Yes	
	Rev #	11				
	Designer	LW		TDSI X	TTNI	TMNI	TSNI
	Standards Engineer AL SILVA			**22022092**			

UG PRIMARY CABLE, 15kV EPR-INSULATED, ALUMINUM

ALUMINUM CONDUCTOR, COPPER CONCENTRIC NEUTRAL, JACKETED

GENERAL: 15kV Jacketed primary aluminum distribution cable for underground installations.

SPECIFICATIONS: Cable shall be manufactured per District Specifications 16120.4 *..\Data\STANDARD\SPECIFICATIONS\District Specs - Current written. The cable shall consist of layers of*

- *Stranded Aluminum Conductor; non-filled or strand filled*
- *Semiconducting EPR conductor shield*
- *Insulation EPR, 220 Mils 133% level*
- *Semiconducting EPR insulation shield*
- *Concentric neutral conductor-bare copper wires; full, 1/3, or 1/6 as required*
- *Outer jacket black LLDPE extruded with 3 red ID stripes and NESC lightning bolt*

PURCHASING: UOM: Foot

Include stock page and District specification with each purchase request and contract.

STOCK NUMBER	SIZE	STR	COPPER NEUTRAL (NO. X AWG)	NOM. O.D (inches)	NET WT (lbs/1000')	APPROVED MANUFACTURERS & CATALOG NUMBERS					
						OKONITE		KERITE		PRYSMIAN GENERAL CABLE	
						NON FILLED	STRAND FILLED	NON FILLED	STRAND FILLED	NON FILLED	STRAND FILLED
COMPRESSED - FULL NEUTRAL											
09300610	2	7	10 x 14	1.08	595	**161-23-3060**	**163-23-3060**	---	**102F15-K1200**	**352817**	---
09300612	1/0	19	16 x 14	1.15	752	**161-23-3072**	**163-23-3072**	---	**111F15-K1200**	**127295**	**749746**
COMPRESSED - 1/3 NEUTRAL											
09300616	4/0	19	11 x 14	1.30	889	**160-23-3081**	**162.23-3081**	---	**141F15-K32000**	**859119**	**827597**
09300636	350	37	18 x 14	1.50	1280	**160-23-3090**	**162-23-3090**	**135A15-K3200**	**135F15-K3200**	**196029**	---
09300676	750	61	15 x 10	1.96	2237	**160-23-3096**	**162-23-3096**	**175A15-K3200001**	**175F15-K32000001**	**864446**	**604565**
09300691	1000	61	20 x 10	2.15	2875	**160-23-3099**	**162-23-3099**	**190A15-K3200**	**190F15-K3200**	**629316**	---
COMPACT - 1/6 NEUTRAL											
09300695	1100	61	18 x 12	2.01	2471	**160-23-9590**			**191H15-K2200**		

Rev. 09-25-19 DH "Added Strand Filled for all sizes; Deleted 09300876 and combined with 09300676; Updated catalog numbers."
Rev. 08-16-18 DH "Corrected specifications section, moved 220 mils to refer to insulation.
Rev. 09-07-16 DH "Removed 16120.4A reference and pre-qual information; updated specifications; Removed Kerite cat numbers."
Rev. 02-17-16 SW "Added 09300695, updated specification numbers"

PUBLIC UTILITY DISTRICT #2 OF GRANT COUNTY	Date	03/17/95	UG PRIMARY CABLE, 15kV EPR-INSULATED, ALUMINUM	ASSEMBLY UNIT: Yes
	Rev #	10		
	Designer	LL		TDSI X / TTNI / TMNI / TSNI
	Standards Engineer: E. WENKE			**09300610**

UG PRIMARY CABLE, 15kV EPR-INSULATED, ALUMINUM

1.0 Scope This specification covers 15kV underground primary distribution cable-jacketed

2.0 Standard Reference:

The materials, construction and tests for conductors shall conform to the applicable requirements of the latest publication of the American Society for Testing and Materials (ASTM), American National Standards Institute (ANSI), National Electrical Manufacturers Associations (NEMA), Association of Edison Illuminating Companies (AEIC), and Insulated Cable Engineering Association (ICEA).

3.0 Specifications:

3.1 Jacketed underground distribution cable shall be rated for 15kV application with aluminum conductor.

3.2 Cable shall have a temperature rated to 105° C.

3.3 Cable shall be approved for direct burial, conduit installation, and underground duct banks.

3.4 The outer jacket shall be marked with a continuous red identification stripe, manufacturer name, voltage rating, insulation factor, etc. as stated in specification 16120.4.

4.0 Packaging:

4.1 The conductor shall be supplied on non-returnable reels in standard packaging lengths for the reel size specified. The packaging lengths shall not exceed 5% over nor 0% under the standard packaging length. Reel sizes shall be a minimum of 2 inch larger than the wound conductor. Recycled reels shall not be accepted.

4.2 The conductor shall be level wound reels. Wooden reels shall be used for all conductors; wooden reels shall have counter sunk bolt ends and nuts. ***Reels with protruding nuts and/or bolts shall not be accepted.*** The conductor shall have Level 2 protection over outer layer of cable in accordance with NEMA WC26. Wrap shall be secured with 2 steel bandings.

4.3 Each reel shall be tagged with two shipping tags. One tag shall be weather protected and securely attached to the outside of the reel flange. The second tag shall be stapled or secured on the inside of the flange. Each tag shall contain the following information.

a. Destination
b. Reel Number
c. PUD Purchase Order Number
d. Manufacturer's Name
e. Date of Manufacturer
f. Footage of Cable on Reel
g. Beginning cable footage number
h. Ending cable footage number
i. Number, Type and Size of Conductor
j. Cable Configuration
k. Thickness and Type of Insulation
l. Voltage Rating
m. **Gross, Tare, and Net Weight**
n. DO NOT UPEND.
   * Bright Red or Orange
   * Min. 2" high
   * appropriate warning symbol

4.4 Reel type and dimensions as specified per specification 16120.4 unless otherwise noted.

PUBLIC UTILITY DISTRICT #2 OF GRANT COUNTY	Date	03/17/95	UG PRIMARY CABLE, 15kV EPR-INSULATED, ALUMINUM	ASSEMBLY UNIT	Yes		
	Rev #	10					
	Designer	LL		TDSI X	TTNI	TMNI	TSNI
	Standards Engineer E. WENKE			09300610			

CABLE, URD SINGLE CONDUCTOR, 600V, USE-2, ALUMINUM

GENERAL: For secondary distribution, station control wiring in conduits or ducts rated at 600 volts or less.

SPECIFICATIONS: Conductors shall be stranded, compressed 1350-H19 aluminum, insulated with crosslink polyethylene. Conductors shall meet or exceed the following applicable specifications: ASTM B-230, B-231, B-766, ICEA S-66-524, and UL standard 854 for Type USE-2.

PURCHASING: Quantity per foot.

STOCK NUMBER	COND. SIZE	STR	APPROX. CABLE OD (INCHES)	AMPACITY		APPROVED MANUFACTURER & CATALOG NUMBERS		
				DIRECT BURIED	IN DUCTS	OKONITE	CME	SOUTHWIRE
09200608	6	7	.31	19	65			
09200609	4	7	.35	120	85			
09200610	2	7	.41	155	115			

Rev. 10-11-07 DH “Formerly 09722000-09722002; Deleted 09722005-09722009; changed UOM to ft.; added CME and Southwire.”
Rev. 06-15-05 DH “Updated to PageMaker; Added specifications and second page for product info.”

PUBLIC UTILITY DISTRICT #2 OF GRANT COUNTY	Date	01/07/79	CABLE URD SINGLE CONDUCTOR, USE-2, 600V, AL	ASSEMBLY UNIT	Yes
	Rev #	3		SUBSTITUIONS	Approval Required
	Designer	AS		TDSI X / TTNI / TMNI / TSNI	
	Standards Engineer: A. SILVA			**09200608**	

CABLE, URD SINGLE CONDUCTOR, 600V, USE-2, ALUMINUM

1.0 Scope This specification covers 600V underground service entrance cable.

2.0 Standard Reference:

The materials, construction and tests for conductors shall conform to the applicable requirements of the latest publication of the American Society for Testing and Materials (ASTM), American National Standards Institute (ANSI) and National Electrical Manufacturers Associations (NEMA).

3.0 Specifications:

3.1 Conductors shall be UL-listed Type RHH, RHW-2, or USE-2, suitable for operation at 600 volts or less in wet or dry locations.

3.2 Cable shall have a temperature rated to 90° C.

3.3 Cable shall be approved for direct burial, conduct insulation, and underground duct.

4.0 Packaging:

4.1 The conductor shall be supplied on non-returnable reels in standard packaging lengths for the reel size specified. The packaging lengths shall not exceed 5% over nor 5% under the standard packaging length. Reel sizes shall be a minimum of 1-1/2 inch larger than the wound conductor.

4.2 The conductor shall be level wound reels. For conductor sizes up to #2 reels may be plastic. Wooden reels may be used for all conductors; wooden reels shall have counter sunk bolt ends and nuts.* The conductor shall be protected by heavy fiberboard wrapping secured with steel banding.

4.3 Each reel shall be tagged with two shipping tags. One tag shall be weather protected and securely attached to the outside of the reel flange. The second tag shall be stapled or secured on the inside of the flange. Each tag shall contain the following information.

a. Product Identification
b. Item Description
c. Conductor Length
d. **Gross, Tare and Net Weight**
e. PUD Purchase Order Number

4.4 Reel type and dimensions shall be specified with each other.

****Note: Reels with protruding nuts and/or bolts shall not be accepted.***

PUBLIC UTILITY DISTRICT #2 OF GRANT COUNTY	Date	01/07/79	CABLE URD SINGLE CONDUCTOR, USE-2, 600V, AL	ASSEMBLY UNIT	Yes		
	Rev #	3		SUBSTITUIONS	Approval Required		
	Designer	AS		TDSI X	TTNI	TMNI	TSNI
	Standards Engineer A. SILVA			**09200608**			

MULTI-CONDUCTOR, UG, 600V, ALUMINUM

Duplex Secondary
1 conductor, 1 neutral

Triplex Secondary
2 conductors, 1 neutral

Quadruplex Secondary
3 conductors, 1 neutral

GENERAL: For secondary distribution and underground service at 600 volts or less.

SPECIFICATIONS: Conductors shall be stranded, compressed 1350-H19 aluminum, insulated with vulcanized interlinked polyethylene. Neutrals shall have three yellow extruded stripes located at 120° intervals. Cables shall have sequential footage marks. Conductor shall meet or exceed the following applicable specifications: ASTM B-230, B-231, B-786, ICEA S-66-524, and UL standard 854 for Type USE-2. See District Specification Section 16240.2.

PACKAGING: Conductor shall be supplied on non-returnable reels in either “cut to order” or standard lengths as specified. The conductor shall be level wound on the reel. Reel sizes shall be a minimum of 1-1/2” inch larger than the wound conductor. Conductor shall be protected by heavy wrapping, either heavy fiberboard or 10 mil. plastic. Package material shall have two shipping/loading tags: A weather protected tag shall be attached to the reel secure enough for shipping and handling. The second tag shall be stapled or glued to the reel face. Each tag shall contain the following in a legible print or type: Product identification, Item description, Conductor length, Gross, and Net weight. The District purchase order number shall be stamped or marked on the reel and both tags.

PURCHASING: Quantity per feet.

STOCK NUMBER	POWER CONDUCTORS			NEUTRAL CONDUCTORS			APPROX. NET WT (lb/M ft.)	CODE NAME
	SIZE	STR	INSUL. (mils)	SIZE	STR	INSUL. (mils)		
DUPLEX								
09102004	4	7	60	4	7	60	135	**DELGADO**
09102006	6	7	60	6	7	60	95	**CLAFLIN**
TRIPLEX								
09103010	2	7	60	2	7	60	292	**RAMAPO**
09103013	2/0	19	80	2/0	19	80	559	**HUNTER**
09103012	1/0	19	80	2	7	60	407	**BRENAU**
09103016	4/0	19	80	2/0	19	80	738	**SWEETBRIAR**
09103036	350	37	95	4/0	19	80	1157	**WESLEYAN**
QUADRUPLEX								
09104010	2	7	60	4	7	60	377	**DYKE**
09104013	2/0	19	80	1	19	80	723	**SYRACUSE**
09104016	4/0	19	80	2/0	19	80	1063	**WAKE FORREST**
09104036	350	37	95	4/0	19	80	1598	**SLIPPERY ROCK**

Rev. 11-26-08 MHS “Added Duplex numbers; Changed page number; Removed ‘Yellow Neutral’ column; .”
Rev. 10-11-07 DH “formerly 09722302 - 09722609; Deleted 09722307; Changed UOM to ft. from lbs.;
Rev. 04-04-07 DH “Changed Title; Separated Triplex and Quad types; Changed cond. no. for 09722302-7; Reformatted page.”
Rev. 11-17-04 MS “Deleted 09722405 - 2/0 #2-19 strand, code Bliss and Converse.”

PUBLIC UTILITY DISTRICT #2 OF GRANT COUNTY	Date	09/26/77
	Rev #	6
	Designer	JB
	Standards Engineer AL SILVA	

MULTI-CONDUCTOR, UG,
600V, ALUMINUM

ASSEMBLY UNIT	Yes			
SOLE SOURCE	No			
TDSI X	TTNI	TMNI	TSNI	

09102004